On Board Diagnostic (OBD)

On Board Diagnostic (OBD), technical data

Equipment

- Data is transmitted between the control module and the VAS5051 tester or VAG1551 Scan Tool (ST) via operating mode "On Board Diagnostic (OBD)".
- DTC memory is designed for permanent memory and is therefore not dependent on voltage supply.
- Display of stored DTCs occurs after initiation of display mode ⇒ Page 01-12 .
- DTC memory must be erased after malfunction is repaired ⇒ Page 01-12 .

Important:

- Readiness code must be re-generated after every time DTC memory is erased ⇒ Page 01-84 .

cardiagn.com

- If the ECM recognizes malfunctions that lead to a worsening of emissions values, it indicates them by lighting the Malfunction Indicator Lamp (MIL) -K83- in the instrument cluster. Meaning of exhaust MIL ⇒ Page 01-3 .

- "E-Gas"-relevant malfunctions are also indicated by the warning lamp for Electronic Power Control ("EPC warning lamp") in the instrument cluster.

cardiagn.com

Malfunction Indicator Lamp (MIL), significance

If the ECM recognizes malfunctions that lead to a worsening of emissions values, it indicates them by lighting the exhaust Malfunction Indicator Lamp (MIL).

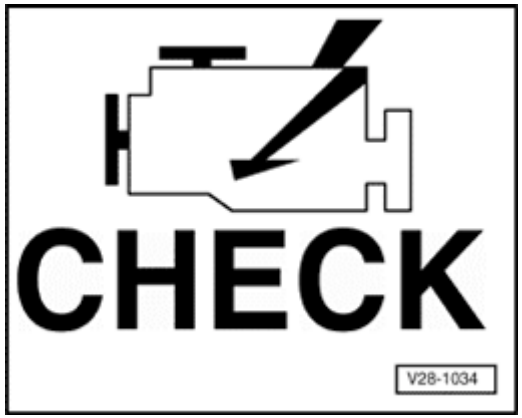

Installation location of exhaust Malfunction Indicator Lamp (MIL)

The Engine Control Module (ECM) switches on the exhaust Malfunction Indicator Lamp (MIL) after ignition is switched on. Shortly after engine is started, the exhaust MIL will go out. This requires, first of all, that the Engine Control Module (ECM) does not detect a malfunction that worsens the emissions values and, secondly, that activation of the lamp by the Engine Control Module (ECM) is OK.

If malfunctions that worsen emissions are recognized during operation of the engine, the ECM switches on the exhaust MIL in instrument cluster. (These malfunctions are listed in the DTC table). An entry is made in DTC memory at the same time.

The Malfunction Indicator Lamp (MIL) can blink or remain lit continuously. DTC memory should be checked in either case ⇒ Page 01-12 .

cardiagn.com

Continuously lit:

There is a malfunction that causes increased emissions. Check DTC memory for Motronic ECM and automatic transmission (if installed).

Check DTC memory if there is a driveability problem or a customer complaint, but the exhaust Malfunction Indicator Lamp (MIL) is not lit. There may be DTCs stored that do not cause the exhaust MIL to light up immediately, but only after engine is started again and malfunction is recognized again.

Blinking:

There is a malfunction that causes damage to the catalytic converter in this driving condition (e.g. combustion misfire). In this case, vehicle must only be driven at reduced power!

Note:

Catalytic converter must be checked after malfunction is repaired.

cardiagn.com

Malfunction Indicator Lamp (MIL), checking

Function test of warning lamp

- Switch ignition on.

  - Exhaust MIL must light up

- Start engine.

  - Shortly after engine is started, the Malfunction Indicator Lamp (MIL) will go out if there are no malfunctions stored in DTC memory that relate to the E-gas system

Note:

The switch-on signal for Malfunction Indicator Lamp (MIL) is transfered from the Engine Control Module (ECM) to the instrument cluster via CAN-bus. Check data exchange between Engine Control Module (ECM) and other CAN capable control modules ⇒ *Page 24-178*

cardiagn.com

Safety precautions

If special testing equipment is required during road test, note the following:

WARNING!

- ***Test equipment must always be secured to the rear seat and operated from there by a second person.***

- ***If test and measuring equipment is operated from the passenger seat, the person seated there could be injured in the event of an accident involving deployment of the passenger-side airbag.***

cardiagn.com

VAS 5051 tester, connecting and selecting functions

Test requirements:

- Fuses for engine electronics OK

⇒ *Electrical Wiring Diagrams, Troubleshooting & Component Locations*

- Fuel Pump (FP) relay OK; checking ⇒ Page 24-52 .
- Battery voltage at least 12.7 V
- Ground (GND) connections at engine and transmission OK

Procedure

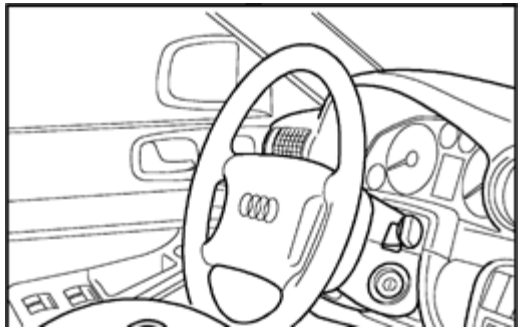

- Connect VAS5051 tester to vehicle with VAS5051/1 diagnostic wire.

WARNING!

Observe safety precautions ⇒ ***Page 01-6*** ***.***

Note:

cardiagn.com

If a malfunction indication is displayed:

⇒ *Operating instructions for the VAS 5051 tester*

cardiagn.com

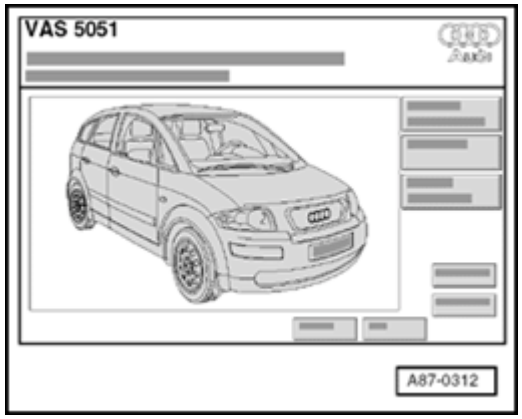

Display on VAS5051:

- Press the "Guided fault finding" button.

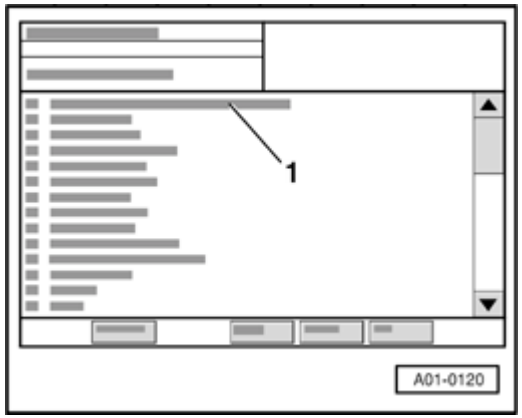

Display on VAS5051:

Note:

Selecting "00 - Check DTC memory - entire system" in selection -1- initiates the automatic test sequence, i.e. it results in a DTC check on all OBD capable systems in the vehicle.

cardiagn.com

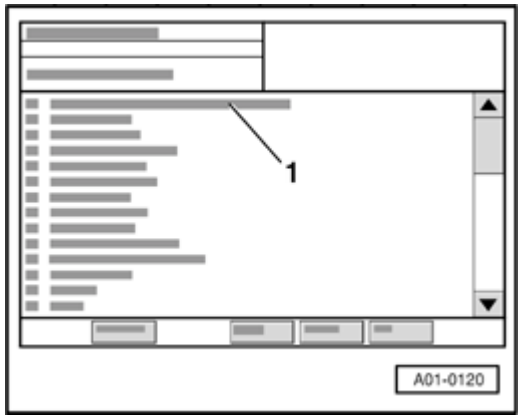

Display on VAS5051:

Depending on desired function ⇒ Table "diagnostic functions", ⇒ Page 01-11 :

- Switch ignition on.

or

- Start engine.
- Press selection -1- of vehicle system "01 - Engine electronics".
- Wait until the next indication appears on display.

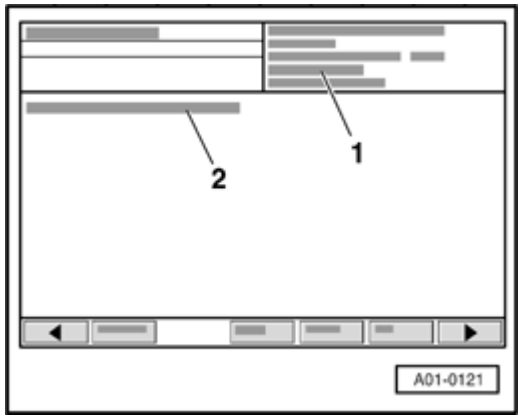

Display on VAS5051:

1 - Control module identification of Engine Control Module (ECM) ⇒ Page 01-10

2 - Control module identification of immobilizer ⇒ Page 01-10

cardiagn.com

Engine Control Module (ECM) identification (example)	
01 - Engine electronics	Vehicle system
4B0906018M	part number; allocation ⇒ *Parts Catalog*
1.8L 1) R4/5VT 2) G 3) 0002 4)	1) Engine displacement 2) Inline engine, 4 cylinders/5-valve turbo 3) ♦ G = cruise control system enabled ♦ no indication = no cruise control system or cruise control system not enabled Data version (software version) of control module 4)
Coding 16501	Control module coding (checking ⇒ Page 01-71)
Workshop code 12345	Workshop identification of VAG1551, with which the last coding was performed

Control module identification, immobilizer (example)	
WAUZZZ8DZA1004321 1) AUZ7Z0X1137197 2)	1) 17 digit VIN (Vehicle Identification Number) 14-digit identification number of immobilizer 2)

cardiagn.com

- Click on ▶ - button

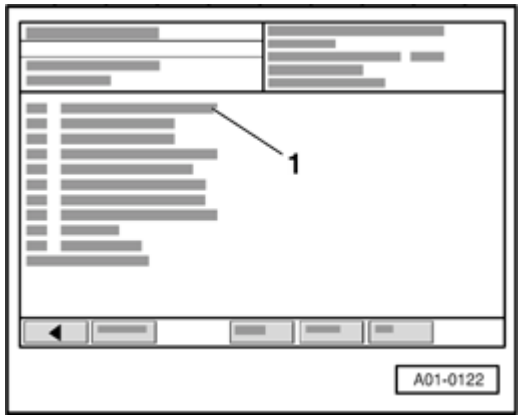

➢ Display on VAS5051:

1 - Selection of diagnostic functions:

Diagnostic functions	Ignition on,engine off	Engine running at idle	Vehicle in drive mode	page
02 Check DTC Memory	No	Yes	Yes	⇒ Page 01-12
03 Output Diagnostic Test Mode (DTM)	Yes	No	No	⇒ Page 01-51
04 Basic Setting	Yes	Yes	Yes	⇒ Page 01-66
05 Erase DTC Memory	Yes	Yes	Yes	⇒ Page 01-12
06 End Output	Yes	Yes	Yes	⇒ Page 01-16
07 Code control module	Yes	No	No	⇒ Page 01-71

cardiagn.com

08	Read measuring value block	Yes	Yes	Yes	⇒ Page 01-74
09	Read Individual Measuring Value	No	No	No	-
10	Adaptation	No	No	No	-
11	Login procedure	No	No	No	-

cardiagn.com

Diagnostic Trouble Code (DTC) memory, checking and erasing

Check DTC Memory (function 02)

- Connect VAS5051 tester ⇒ Page 01-7 and select vehicle system "01 - Engine electronics". Engine should run at idle for this.

Note:

If engine doesn't start, crank engine using starter for at least 5 seconds. Do not switch ignition off afterward under any circumstance.

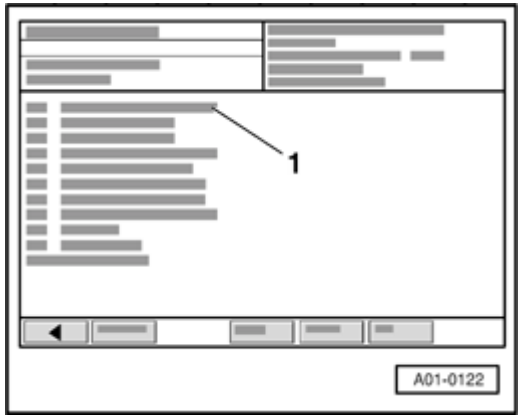

Display on VAS5051:

- In selection -1-, click on the diagnostic function "02 - Check DTC memory".

cardiagn.com

01-13

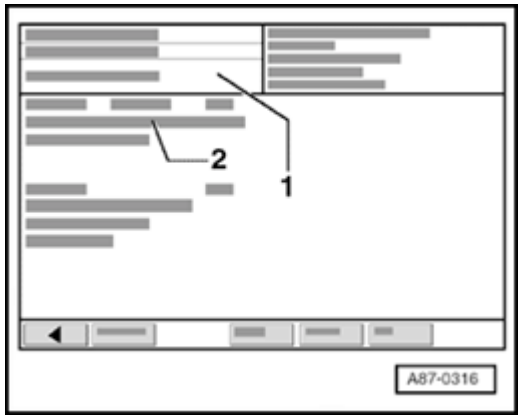

Display on VAS5051:

1 - DTC memory content:

- 0 malfunctions recognized

or

- X malfunctions recognized

2 - Malfunction

- DTC
- malfunction location
- malfunction type

A - If malfunctions were recognized:

- Print out screen content or On Board Diagnostic (OBD) protocol.
- End function "02 - check DTC memory" by pressing ◀ button.

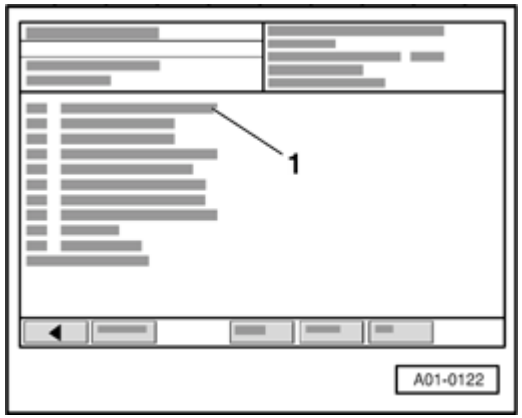

Display on VAS5051:

- Repair malfunction(s) according to DTC table ⇒ Page 01-17 .
- In selection, click on diagnostic function "02 - Check DTC memory" again and erase DTC memory ⇒ Page 01-14
- In selection, click on diagnostic function "06 - end output" ⇒ Page 01-16 .

B - If no malfunctions were recognized:

cardiagn.com

- In selection, click on diagnostic function "06 - end output" ⇒ Page 01-16 .

cardiagn.com

01-14

Erase DTC Memory (function 05)

Important note:

- *If there are no DTCs in DTC memory, DTC memory should not be unnecessarily erased or else readiness code will be lost.*
- *If DTC memory was erased, readiness code must be re-generated ⇒ Page 01-84 .*
- *If DTC memory cannot be erased, check DTC memory again and repair malfunction.*

Requirements

- DTC memory checked ⇒ Page 01-12 .
- All malfunctions repaired.

After successful DTC memory check:

Display on VAS5051:

- In selection -1-, click on the diagnostic function "05 - Check DTC memory".

cardiagn.com

01-15

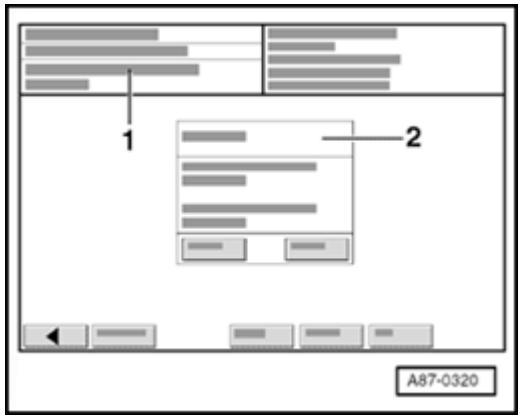

Display on VAS5051:

1 - ♦ no indication (before erasing)

or

♦ DTC memory erased

Note:

If indication -1- appears in display field: "DTC memory has not yet been checked", the work sequence was not adhered to correctly. DTC memory can only be erased if DTC memory was checked before.

2 - Note: Perform the function?

Note: Data is being erased !

- Press on "OK" button in display -2-.
- End function "05 - erase DTC memory" by pressing on ◀ button.
- Check DTC memory again after repair work:

Note:

This causes DTCs to be erased that were stored during repair of malfunction, e.g. because harness connectors were disconnected.

- If DTC memory was erased, readiness code must be re-generated ⇒ Page 01-84 .

cardiagn.com

01-16

End Output (function 06)

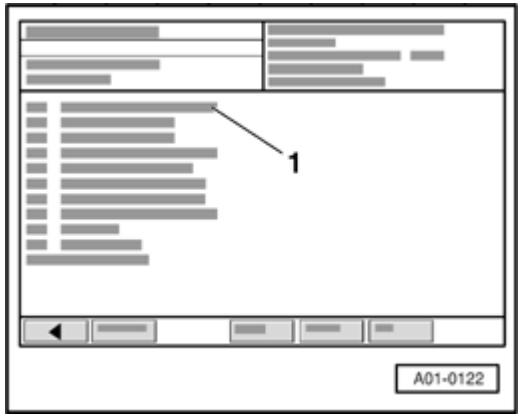

Display on VAS5051:

- Select diagnostic function "06 - end output" in selection -1-.

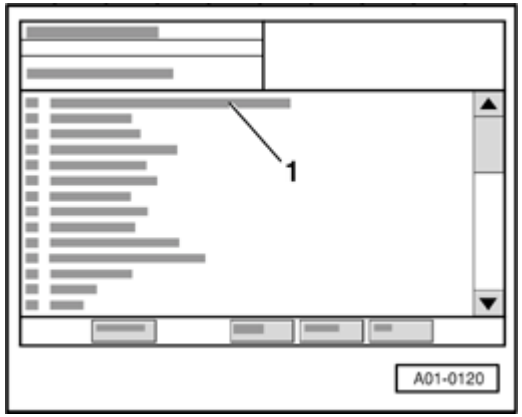

Display on VAS5051:

- Switch off ignition and disconnect diagnostic connector after this indication is displayed.

cardiagn.com

01-17

Diagnostic Trouble Code (DTC) table

Notes:

- *When malfunctions occur in monitored sensors or components, Diagnostic Trouble Codes (DTCs) are stored in DTC memory with a description of the malfunction type.*
- *"E-Gas" relevant malfunctions are also indicated in the instrument cluster by the warning lamp for Electronic Power Control ("EPC warning lamp"); Notes for E-Gas system ⇒ Page 24-120 .*
- *Malfunctions that worsen emissions are indicated by an exhaust warning lamp (MIL) in the instrument cluster. Notes for Malfunction Indicator Lamp (MIL) ⇒ Page 01-3 .*
- *The DTC table is organized by the 5 digit code at left.*
- *If a stored DTC does not recur within the next 40 warm-up cycles, the DTC will be erased automatically.*
- *Malfunctions that occur sporadically (temporarily occurring malfunctions) are identified with "sporadic" on display. The word sporadic means "appearing or occurring at irregular intervals, occasional".*
- *Do not immediately replace components that the VAS5051 suggests are faulty, instead: Check wire connections and harness connectors to these components according to wiring diagram. Also check Ground (GND) connections according to wiring diagram. This is particularly valid when malfunctions are displayed as "sporadic".*
- *If the connector is disconnected from the ECM or the battery is disconnected, all adaptation values in the control module are erased. DTC memory content will remain intact however. If the engine is started after this, a rough, uneven idle can result. In this case, engine must be allowed to run at idle for a few minutes until adaptation procedure has been completed.*

cardiagn.com

- *If DTC memory was erased ⇒ Page 01-12 , readiness code must be re-generated ⇒ Page 01-84 .*

cardiagn.com

01-18

DTC codes 16395 - 17624

DTC		DTC text	Corrective action
SAE	VAG		
P0011	16395	Bank 1 camshaft advance adjustment Specified value not obtained	⇒ *Repair Manual, 1.8 Liter 4-Cyl. 5V Turbo Engine Mechanical, Engine Code (s): AWM, Repair Group 15; Checking camshaft adjustment*
P0012	16396	Bank 1 camshaft adjustment Specified value not obtained	
P0101	16485	Mass Air Flow (MAF) sensor -G70- Implausible signal	- Check Mass Air Flow (MAF) sensor ⇒ Page 24-59
P0102	16486	Mass Air Flow (MAF) sensor -G70- Signal too small	
P0103	16487	Mass Air Flow (MAF) sensor -G70- Signal too large	

cardiagn.com

01-19

DTC		DTC text	Corrective action
SAE	VAG		
P0106	16490	MAP sensor -G71-/BARO sensor -F96- Implausible signal[1)]	⇒ *Repair Manual, 1.8 Liter 4-Cyl. 5V Turbo Engine Mechanical, Engine Code(s): AWM, Repair Group 21, Charge air system with turbocharger, checking*
P0112	16496	Intake Air Temperature (IAT) sensor -G42- Signal too small	- Intake Air Temperature (IAT) sensor, checking ⇒ Page 28-21
P0113	16497	Intake Air Temperature (IAT) sensor -G42- Signal too large	
P0116	16500	Engine Coolant Temperature (ECT) sensor -G62- Implausible signal	- Engine Coolant Temperature (ECT) sensor, checking ⇒ Page 28-31
P0117	16501	Engine Coolant Temperature (ECT) sensor -G62- Signal too small	
P0118	16502	Engine Coolant Temperature (ECT) sensor -G62- Signal too large	

cardiagn.com

[1)] Intake manifold pressure is determined by the charge air pressure sensor -G31- (instead of -G71- as indicated), air pressure is determined by the Barometric Pressure (BARO) sensor -F96- (in ECM).

cardiagn.com

01-20

DTC		DTC text	Corrective action
SAE	VAG		
P0130	16514	Bank 1, sensor 1 Electrical malfunction in circuit	- Check Oxygen Sensor (O2S) and oxygen sensor control before Three Way Catalytic Converter (TWC) ⇒ Page 24-71
P0131	16515	Bank 1, sensor 1 Voltage too low	
P0132	16516	Bank 1, sensor 1 Voltage too high	
P0133	16517	Bank1, sensor 1 Signal too slow	
P0134	16518	Bank 1, sensor 1 No activity	
P0135	16519	Bank 1, sensor 1 Heating circuit, electrical malfunction	

cardiagn.com

01-21

DTC		DTC text	Corrective action
SAE	VAG		
P0136	16520	Bank 2, sensor 1 Electrical malfunction in circuit	- Check Oxygen Sensor (O2S) and oxygen sensor control behind Three Way Catalytic Converter (TWC) ⇒ Page 24-94
P0137	16521	Bank 2, sensor 1 Voltage too low	
P0138	16522	Bank 2, sensor 1 Voltage too high	
P0139	16523	Bank1, sensor 2 Signal too slow	
P0140	16524	Bank 2, sensor 1 No activity	
P0236	16620	Charge air pressure sensor -G31- Implausible signal	⇒ *Repair Manual, 1.8 Liter 4-Cyl. 5V Turbo Engine Mechanical, Engine Code(s): AWM, Repair Group 21, Charge air system with turbocharger, checking*
P0237	16621	Charge air pressure sensor -G31- Signal too small	
P0238	16622	Charge air pressure	

cardiagn.com

		sensor -G31- Signal too large	

cardiagn.com

01-22

DTC		DTC text	Corrective action
SAE	VAG		
P0300	16684	Combustion misfire detected	- Check fuel pressure ⇒ Page 24-32 - Check fuel injectors ⇒ Page 24-37 - Check spark plugs and ignition wires with connector - Ignition coils with power output stages Checking ⇒ Page 28-4 - Check misfire recognition ⇒ Page 28-55 - Fill fuel tank with fuel
P0301	16685	Cyl. 1 combustion misfire detected	
P0302	16686	Cyl. 2 combustion misfire detected	
P0303	16687	Cyl. 3 combustion misfire detected	
P0304	16688	Cyl. 4 combustion misfire detected	
P0321	16705	Engine Speed (RPM) sensor -G28- Implausible signal	- Check engine speed (RPM) sensor ⇒ Page 28-27
P0322	16706	Engine Speed (RPM) sensor -G28- No signal	

cardiagn.com

01-23

DTC		DTC text	Corrective action
SAE	VAG		
P0327	16711	Knock Sensor (KS) 1 -G61- Signal too small	- Check knock sensor ⇒ Page 28-45
P0328	16712	Knock Sensor (KS) 1 -G61- Signal too large	
P0332	16716	Knock Sensor (KS) 2 -G66- Signal too small	
P0333	16717	Knock Sensor (KS) 2 -G66- Signal too large	
P0341	16725	Camshaft Position (CMP) sensor -G40- Implausible signal	- Check Camshaft Position (CMP) sensor ⇒ Page 28-49
P0342	16726	Camshaft Position (CMP) sensor -G40- Signal too small	
P0343	16727	Camshaft Position (CMP) sensor -G40- Signal too large	

cardiagn.com

01-24

DTC		DTC text	Corrective action
SAE	VAG		
P0411	16795	Secondary air system Throughput faulty	⇒ *Repair Manual, 1.8 Liter 4-Cyl. 5V Turbo Engine Mechanical, Engine Code(s): AWM, Repair Group 26; Checking Secondary Air Injection (AIR) system* - Check hose setup (Secondary Air Injection -AIR- solenoid valve); check intake system for leaks (false air) ⇒ Page 24-68
P0420	16804	Bank 1, catalytic converter system Not effective enough	- Generate readiness code ⇒ Page 01-84 . If the same malfunction is indicated again, replace catalytic converter. ⇒ *Repair Manual, 1.8 Liter 4-Cyl. 5V Turbo Engine Mechanical, Engine Code(s): AWM, Repair Group 26*
P0422	16806	Bank 1, main catalytic converter Not effective enough	
P0441	16825	Tank ventilation system Throughput faulty	- Check Evaporative Emission (EVAP) canister purge regulator valve ⇒ Page 24-114

cardiagn.com

01-25

DTC		DTC text	Corrective action
SAE	VAG		
P0442	16826	Tank ventilation system Small leak detected	- Checking fuel supply and ventilation systems for leaks ⇒ *Repair Manual, Fuel Supply System, Repair Group 20; Fuel supply; EVAP canister system components, servicing; tank leak diagnostic, performing.*
P0455	16839	Tank ventilation system Large leak detected	- Checking EVAP system for leaks using KLI9210 EVAP tester ⇒ *Repair Manual, Fuel Supply System, Repair Group 20;*
P0456	16840	Tank ventilation system Pinhole leak detected	- Check tank system and tank ventilation systems for leaks ⇒ *Repair Manual, Fuel Supply System, Repair Group 20; EVAP canister system components, servicing; tank leak diagnostic, performing.* - Checking EVAP system for leaks using KLI9210 EVAP tester ⇒ *Repair Manual, Fuel Supply System, Repair Group 20;*

cardiagn.com

01-26

DTC		DTC text	Corrective action
P0501	16885	Vehicle speed signal Implausible signal	- Checking Vehicle Speed Signal (VSS) ⇒ Page 24-165
P0506	16890	Idle control RPM below specified value	- Check throttle valve control module ⇒ Page 24-124 - Check hose setup (Secondary Air Injection -AIR- solenoid valve); check intake system for leaks (false air) ⇒ Page 24-68
P0507	16891	Idle control RPM above specified value	
P0560	16944	Voltage supply Implausible signal	- Check voltage supply for control module ⇒ Page 28-37
P0562	16946	Voltage supply Voltage too low	
P0563	16947	Voltage supply Voltage too high	
P0571	16955	Brake light switch -F- [1] Implausible signal	- Check brake light switch and brake pedal switch ⇒ Page 24-149

[1] Brake pedal switch -F47- is monitored in addition to brake light switch -F-.

cardiagn.com

01-27

DTC		DTC text	Corrective action
SAE	VAG		
P0601	16985	Control module faulty	- Replacing Engine Control Module (ECM) ⇒ Page 24-22
P0604	16988	Control module faulty	
P0605	16989	Control module faulty	
P0606	16990	Control module faulty	
P0685	17069	Main relay -J271- Open circuit	- Check motronic Engine Control Module (ECM) voltage supply relay -J271- ⇒ Page 28-13
P0686	17070	Main relay -J271- Short circuit to Ground (GND)	
P0687	17071	Main relay -J271- Short circuit to B+	
P0688	17072	Main relay, load circuit -J271- Open circuit	

cardiagn.com

01-28

DTC		DTC text	Corrective action
SAE	VAG		
P1102	17510	Bank 1, sensor 1, heating circuit Short circuit to B+	- Oxygen sensor heating before catalytic converter Checking ⇒ Page 24-89
P1103	17511	Bank 2, sensor 1, heating circuit Performance too low	- Check oxygen sensor heating behind catalytic converter ⇒ Page 24-107
P1105	17513	Bank 2, sensor 1, heating circuit Short circuit to B+	
P1111	17519	Oxygen sensor control, bank 1 System too lean	- Check oxygen sensor control behind catalytic converter ⇒ Page 24-71
P1112	17520	Oxygen sensor control, bank 1 System too rich	
P1113	17521	Bank 1, sensor 1 Internal resistance too high	- Next, check signal wires for contact resistances ⇒ Page 24-82 ; if no contact resistances are present: Replace oxygen sensor
P1114	17522	Bank 2, sensor 1	- Next, check signal wires for contact resistances ⇒ Page 24-105 ; if no contact

cardiagn.com

		Internal resistance too high	resistances are present: Replace oxygen sensor

cardiagn.com

01-29

DTC		DTC text	Corrective action
SAE	VAG		
P1115	17523	Bank 1, sensor 1, heating circuit Short circuit to Ground (GND)	- Check oxygen sensor heating before catalytic converter ⇒ Page 24-89
P1116	17524	Bank 1, sensor 1, heating circuit Open circuit	
P1117	17525	Bank 2, sensor 1, heating circuit Short circuit to Ground (GND)	- Check oxygen sensor heating behind catalytic converter ⇒ Page 24-107
P1118	17526	Bank 2, sensor 1, heating circuit Open circuit	
P1127	17535	Bank 1, mixture adaptation (mult.) System too rich	- Road test vehicle (fuel in oil). - Check fuel system pressure ⇒ Page 24-32 - Check Mass Air Flow (MAF) sensor ⇒ Page 24-59 - Check intake system for leaks (false air) ⇒ Page 24-68 - Check oxygen sensor before catalytic converter ⇒ Page 24-71 - Check oxygen sensor behind catalytic converter ⇒ Page 24-94 - Check fuel injectors ⇒ Page 24-37 .
P1128	17536	Bank 1, mixture adaptation (mult.) System too lean	

Note:

cardiagn.com

mult. = multiplicative, means that malfunction is valid across entire range of engine speed and engine load.

cardiagn.com

01-30

DTC		DTC text	Corrective action
SAE	VAG		
P1136	17544	Bank 1, mixture adaptation (add.) System too lean	- Road test vehicle (fuel in oil). - Check fuel system pressure ⇒ Page 24-32 - Check Mass Air Flow (MAF) sensor ⇒ Page 24-59 - Check intake system for leaks (false air) ⇒ Page 24-68 - Check oxygen sensor behind catalytic converter ⇒ Page 24-94 - Check Evaporative Emission (EVAP) canister purge regulator valve ⇒ Page 24-114
P1137	17545	Bank 1, mixture adaptation (add.) System too rich	
P1143	17551	Load detection Limit exceeded	- Check Mass Air Flow (MAF) sensor ⇒ Page 24-59 - Check throttle valve control module ⇒ Page 24-124

Note:

add = additive, means that malfunction is only valid at closed throttle (idle).

cardiagn.com

01-31

DTC		DTC text	Corrective action
SAE	VAG		
P1149	17557	Oxygen sensor control, bank 1 Unplausible control value	- Check oxygen sensor adaptation values and control ⇒ Page 24-75 - Check fuel system pressure ⇒ Page 24-32 - Check intake system for leaks (false air) ⇒ Page 24-68
P1171	17579	Angle sensor -2- for throttle drive (power accelerator actuation) -G188- Implausible signal	- Check angle sensor -1- for throttle drive ⇒ Page 24-131
P1172	17580	Angle sensor -2- for throttle drive (power accelerator actuation) -G188- Signal too small	
P1173	17581	Angle sensor -2- for throttle drive (power accelerator actuation) -G188- Signal too large	

cardiagn.com

01-32

DTC		DTC text	Corrective action
SAE	VAG		
P1176	17584	Bank 1, oxygen sensor correction behind catalytic converter Control limit reached	- Check oxygen sensor ageing of oxygen sensor before catalytic converter ⇒ Page 24-84 - Check oxygen sensor and oxygen sensor control behind catalytic converter ⇒ Page 24-94
P1198	17606	Bank 2, sensor 1, heating circuit Electrical malfunction	- Check oxygen sensor heating behind catalytic converter ⇒ Page 24-107
P1213	17621	Cylinder 1 fuel injector -N30- Short circuit to B+	- Check fuel injectors ⇒ Page 24-37 .
P1214	17622	Cylinder 2 fuel injector -N31- Short circuit to B+	
P1215	17623	Cylinder 3 fuel injector -N32- Short circuit to B+	
P1216	17624	Cylinder 4 fuel injector -N33- Short circuit to B+	

cardiagn.com

DTC codes 17633 - 18261

DTC		DTC text	Corrective action
SAE	VAG		
P1225	17633	Cylinder 1 fuel injector -N30- Short circuit to Ground (GND)	- Check fuel injectors ⇒ Page 24-37 .
P1226	17634	Cylinder 2 fuel injector -N31- Short circuit to Ground (GND)	
P1227	17635	Cylinder 3 fuel injector -N32- Short circuit to Ground (GND)	
P1228	17636	Cylinder 4 fuel injector -N33- Short circuit to Ground (GND)	

cardiagn.com

01-34

DTC		DTC text	Corrective action
SAE	VAG		
P1237	17645	Cylinder 1 fuel injector -N30- Open circuit	- Check fuel injectors ⇒ Page 24-37 .
P1238	17646	Cylinder 2 fuel injector -N31- Open circuit	
P1239	17647	Cylinder 3 fuel injector -N32- Open circuit	
P1240	17648	Cylinder 4 fuel injector -N33- Open circuit	
P1250	17658	Fuel level too low	- Resulting malfunction ⇒ Note - Fill fuel tank with fuel, erase DTC memory - Check DTC memory of instrument cluster ⇒ *Repair Manual, Electrical Equipment, Repair Group 01, On Board Diagnostic (OBD) of instrument cluster*

Note:

cardiagn.com

The DTC "Fuel level too low" is stored in connection with combustion misfires or malfunctions relating to oxygen sensor control when there is/was too little fuel in fuel tank. The DTC is stored as a static malfunction and is not switched to sporadic even if fuel tank has been filled with fuel in the meantime.

cardiagn.com

01-35

DTC		DTC text	Corrective action
SAE	VAG		
P1287	17695	Recirculating valve for turbocharger -N249- Open circuit	⇒ *Repair Manual, 1.8 Liter 4-Cyl. 5V Turbo Engine Mechanical, Engine Code (s): AWM, Repair Group 21, Charge air system with turbocharger, checking*
P1288	17696	Recirculating valve for turbocharger -N249- Short circuit to B+	
P1289	17697	Recirculating valve for turbocharger -N249- Short circuit to Ground (GND)	
P1296	17704	Malfunction in cooling system	- Check coolant temperature sensor ⇒ Page 28-31 - Check coolant regulator ⇒ *Repair Manual, 1.8 Liter 4-Cyl. 5V Turbo Engine Mechanical, Engine Code (s): AWM, Repair Group 19; parts of cooling system, removing and installing*
P1297	17705	Connection charger-throttle valve Pressure drop	⇒ *Repair Manual, 1.8 Liter 4-Cyl. 5V Turbo Engine Mechanical, Engine Code (s): AWM, Repair Group 21, Charge air system with turbocharger, checking* - Check air pressure system using VAG 1687 charge air system tester ⇒ *Repair Manual, 1.8 Liter 4-Cyl. 5V Turbo Engine Mechanical, Engine Code (s): AWM, Repair Group 21; Charge Pressure, Leak test with VAG 1687*

cardiagn.com

01-36

DTC		DTC text	Corrective action
SAE	VAG		
P1325	17733	Knock control, cyl. 1 Control limit reached	- Check knock control ⇒ Page 28-41
P1326	17734	Knock control, cyl. 2 Control limit reached	
P1327	17735	Knock control, cyl. 3 Control limit reached	
P1328	17736	Knock control, cyl. 4 Control limit reached	
P1335	17743	Engine torque monitoring 2 Control limit exceeded	- Significant leak; check intake system for leaks (false air) ⇒ Page 24-68 - Check Intake Air Temperature (IAT) sensor ⇒ Page 28-21
P1336	17744	Engine torque monitoring Control limit exceeded	- Check Mass Air Flow (MAF) sensor ⇒ Page 24-59 - Check coolant temperature sensor ⇒ Page 28-31

cardiagn.com

01-37

DTC		DTC text	Corrective action
SAE	VAG		
P1340	17748	Camshaft Position (CMP) / crankshaft position sensor incorrect allocation	- Unscrew Camshaft Position (CMP) sensor and check whether shutter wheel is mounted properly at camshaft. (If mounted improperly, locking lug will get squished when mounting bolt is tightened.) - Also check engine timing ⇒ *Repair Manual, 1.8 Liter 4-Cyl. 5V Turbo Engine Mechanical, Engine Code (s): AWM, Repair Group 13; Engine, disassembling and assembling; removing and installing toothed belt*
P1355	17763	Ignition timing, cyl. 1 Open circuit	- Ignition coils with power output stages Checking ⇒ Page 28-4
P1356	17764	Ignition timing, cyl. 1 Short circuit to B+	
P1357	17765	Ignition timing, cyl. 1 Short circuit to Ground (GND)	
P1358	17766	Ignition timing, cyl. 2 Open circuit	

cardiagn.com

01-38

DTC		DTC text	Corrective action
SAE	VAG		
P1359	17767	Ignition timing, cyl. 2 Short circuit to B+	- Ignition coils with power output stages Checking ⇒ Page 28-4
P1360	17768	Ignition timing, cyl. 2 Short circuit to Ground (GND)	
P1361	17769	Ignition timing, cyl. 3 Open circuit	
P1362	17770	Ignition timing, cyl. 3 Short circuit to B+	
P1363	17771	Ignition timing, cyl. 3 Short circuit to Ground (GND)	
P1364	17772	Ignition timing, cyl. 4 Open circuit	
P1365	17773	Ignition timing, cyl. 4 Short circuit to B+	
P1366	17774	Ignition timing, cyl. 4 Short circuit to Ground (GND)	

cardiagn.com

01-39

DTC		DTC text	Corrective action
SAE	VAG		
P1386	17794	Control module faulty	- Replacing Engine Control Module (ECM) ⇒ Page 24-22
P1387	17795	Control module faulty	
P1388	17796	Control module faulty	
P1410	17818	EVAP canister purge regulator valve -N80- Short circuit to B+	- Check Evaporative Emission (EVAP) canister purge regulator valve ⇒ Page 24-114
P1421	17829	Secondary Air Injection (AIR) solenoid valve -N112- Short circuit to Ground (GND)	⇒ *Repair Manual, 1.8 Liter 4-Cyl. 5V Turbo Engine Mechanical, Engine Code(s): AWM, Checking Secondary Air Injection (AIR) system*
P1422	17830	Secondary Air Injection (AIR) solenoid valve -N112- Short circuit to B+	

cardiagn.com

01-40

DTC		DTC text	Corrective action
SAE	VAG		
P1424	17832	Bank 1, Secondary Air Injection (AIR) system Leak detected	- Check hoses and components of the Secondary Air Injection (AIR) system ⇒ *Repair Manual, 1.8 Liter 4-Cyl. 5V Turbo Engine Mechanical, Engine Code(s): AWM, Checking Secondary Air Injection (AIR) system*
P1425	17833	EVAP canister purge regulator valve -N80- Short circuit to Ground (GND)	- Check Evaporative Emission (EVAP) canister purge regulator valve ⇒ Page 24-114
P1426	17834	EVAP canister purge regulator valve -N80- Open circuit	
P1427	17835	Activation of brake vacuum pump Short circuit to B+	⇒ *Repair Manual, Brake System, Repair Group 47*
P1428	17836	Activation of brake vacuum pump Short circuit to Ground (GND)	
P1429	17837	Activation of brake vacuum pump	

cardiagn.com

		Open circuit	

cardiagn.com

01-41

DTC		DTC text	Corrective action
SAE	VAG		
P1432	17840	Secondary Air Injection (AIR) solenoid valve -N112- Open circuit	⇒ *Repair Manual, 1.8 Liter 4-Cyl. 5V Turbo Engine Mechanical, Engine Code(s): AWM, Checking Secondary Air Injection (AIR) system*
P1433	17841	Secondary Air Injection (AIR) pump relay -J299- Open circuit	
P1434	17842	Secondary Air Injection (AIR) pump relay -J299- Short circuit to B+	
P1435	17843	Secondary Air Injection (AIR) pump relay -J299- Short circuit to Ground (GND)	
P1479	17887	Brake vacuum system Mechanical malfunction	- Perform a short trip in Engine Control Module (ECM) (basic setting; display group 8 with ignition on and selector lever in "P" or "N") - Check hose setup to pump or from the pump to brake booster - Perform output Diagnostic Test Mode (DTM) in Engine Control Module (ECM) to check whether the vacuum pump runs or is activated

cardiagn.com

01-42

DTC		DTC text	Corrective action
SAE	VAG		
P1501	17909	Fuel Pump (FP) relay - J17- Short circuit to Ground (GND)	- Check Fuel Pump (FP) relay ⇒ Page 24-52
P1502	17910	Fuel Pump (FP) relay - J17- Short circuit to B+	
P1519	17927	Bank 1, camshaft adjustment Malfunction	⇒ *Repair Manual, 1.8 Liter 4-Cyl. 5V Turbo Engine Mechanical, Engine Code (s): AWM, Repair Group 15; Checking camshaft adjustment*
P1523	17931	Crash signal from airbag control module Implausible signal[1)]	⇒ *Repair Manual, Body On Board Diagnostic (OBD), Repair Group 01; On Board Diagnostic (OBD) of airbag system*
P1529	17937	Camshaft adjustment Short circuit to B+	⇒ *Repair Manual, 1.8 Liter 4-Cyl. 5V Turbo Engine Mechanical, Engine Code (s): AWM, Repair Group 15; Checking camshaft adjustment*
P1530	17938	Camshaft adjustment Short circuit to Ground (GND)	
P1531	17939	Camshaft adjustment	

cardiagn.com

		Open circuit	

1) DTC is stored upon appropriate signal from airbag control module.

cardiagn.com

01-43

DTC		DTC text	Corrective action
SAE	VAG		
P1539	17947	Clutch vacuum vent valve switch -F36- Implausible signal	- Check clutch pedal switch ⇒ Page 24-156
P1541	17908	Fuel Pump (FP) relay -J17- Open circuit	- Check Fuel Pump (FP) relay ⇒ Page 24-52
P1542	17950	Angle sensor -1- for throttle drive (power accelerator actuation) -G187- Implausible signal	- Check angle sensor -1- for throttle drive ⇒ Page 24-131
P1543	17951	Angle sensor -1- for throttle drive (power accelerator actuation) -G187- Signal too small	
P1544	17952	Angle sensor -1- for throttle drive (power accelerator actuation) -G187- Signal too large	
P1545	17953	Throttle valve control Malfunction	- Check throttle valve control module ⇒ Page 24-124

cardiagn.com

01-44

DTC		DTC text	Corrective action
SAE	VAG		
P1546	17954	Wastegate bypass regulator valve -N75- Short circuit to B+	⇒ *Repair Manual, 1.8 Liter 4-Cyl. 5V Turbo Engine Mechanical, Engine Code (s): AWM, Repair Group 21, Charge air system with turbocharger, checking*
P1547	17955	Wastegate bypass regulator valve -N75- Short circuit to Ground (GND)	
P1548	17956	Wastegate bypass regulator valve -N75- Open circuit	
P1550	17958	Boost pressure Control difference	
P1555	17963	Maximum boost pressure exceeded	
P1556	17964	Boost pressure regulation Control limit not reached	
P1557	17965	Boost pressure regulation	- Check air pressure system using VAG 1687 charge air system tester ⇒ *Repair Manual, 1.8 Liter 4-Cyl. 5V Turbo Engine Mechanical, Engine Code*

cardiagn.com

		Control limit exceeded	*(s): AWM, Repair Group 21; Charge Pressure, Leak test with VAG 1687*

cardiagn.com

01-45

DTC		DTC text	Corrective action
SAE	VAG		
P1558	17966	Throttle drive (power accelerator actuation) -G186- Electrical malfunction in circuit	- Check throttle valve control module ⇒ Page 24-124
P1559	17967	Throttle valve control module -J338- Malfunction in basic setting	- Perform adaptation ⇒ Page 24-125
P1560	17968	Maximum engine speed exceeded	- Repair mechanical damage
P1564	17972	Throttle valve control module -J338- Voltage too low during basic setting	- Charge battery, repeat basic setting
P1565	17973	Throttle valve control module -J338- Lower impact not reached	- Check throttle valve control module ⇒ Page 24-124
P1568	17976	Throttle valve control module -J338- Mechanical malfunction	

cardiagn.com

01-46

DTC		DTC text	Corrective action
SAE	VAG		
P1569	17977	Cruise control switch -E45- Implausible signal	⇒ *Repair Manual, Electrical Equipment, Repair Group 01; On Board Diagnostic (OBD) for cruise control system*
P1570	17978	Engine Control Module (ECM)locked	- Adapt electronic immobilizer to Engine Control Module (ECM) ⇒ *Repair Manual, Electrical Equipment, Repair Group 01, On Board Diagnostic (OBD) for immobilizer*
P1579	17987	Throttle valve control module -J338- Adaptation not started	- Perform adaptation of throttle valve control module while maintaining test requirements ⇒ Page 24-125
P1602	18010	Voltage supply, terminal 30 Voltage too low	- Check voltage supply for control module ⇒ Page 28-37

cardiagn.com

DTC		DTC text	Corrective action
SAE	VAG		
P1603	18011	Control module faulty	- Replacing Engine Control Module (ECM) ⇒ Page 24-22
P1604	18012	Control module faulty	
P1606	18014	Rough terrain info/engine torque from ABS control module Electrical malfunction in circuit	- Check data exchange between Engine Control Module (ECM) and other CAN capable control modules ⇒ Page 24-178
P1609	18017	Crash shut-off was triggered (Crash triggered)[1)]	⇒ *Repair Manual, Body On Board Diagnostic (OBD), Repair Group 01; On Board Diagnostic (OBD) of airbag system* - Erase DTC memory of the Engine Control Module (ECM) after output Diagnostic Test Mode (DTM) of the airbag system ⇒ Page 01-12

[1)] DTC is stored upon appropriate signal from airbag control module and also during output Diagnostic Test Mode (DTM) of the airbag system.

cardiagn.com

DTC		DTC text	Corrective action
SAE	VAG		
P1610	18018	Control module faulty	- Replacing Engine Control Module (ECM) ⇒ Page 24-22
P1612	18020	Engine Control Module (ECM) incorrectly coded	- Code Engine Control Module (ECM) ⇒ Page 01-71
P1624	18032	Request for warning lamp on active[1)]	- Exhaust related malfunction of Transmission Control Module (TCM) - Check DTC memory of Transmission Control Module (TCM) ⇒ *Repair Manual, 5-Spd. Automatic Transmission 01V, Repair Group 01, On Board Diagnostic (OBD)*
P1626	18034	Powertrain CAN-bus Missing message from Transmission Control Module	- Check data exchange between Engine Control Module (ECM) and other CAN capable control modules ⇒ Page 24-178

[1)] The Transmission Control Module (TCM) recognized a malfunction that worsens engine emissions. The Transmission Control Module (TCM) sends the DTC to the Engine Control Module (ECM), which then switches on the Malfunction Indicator Lamp (MIL). Notes for Malfunction Indicator Lamp (MIL) ⇒ Page 01-3 . The message P1624 is simultaneously stored in the Engine Control Module (ECM) as evidence that the Malfunction Indicator Lamp (MIL) was not switched on due to an engine problem but rather a transmission problem.

cardiagn.com

01-49

DTC		DTC text	Corrective action
SAE	VAG		
P1630	18038	Throttle Position (TP) sensor -G79- Signal too small	- Throttle Position (TP) sensor, checking ⇒ Page 24-138
P1631	18039	Throttle Position (TP) sensor -G79- Signal too large	
P1633	18041	Sender -2- for accelerator pedal position -G185- Signal too small	
P1634	18042	Sender -2- for accelerator pedal position -G185- Signal too large	
P1640	18048	Control module faulty	- Replacing Engine Control Module (ECM) ⇒ Page 24-22

cardiagn.com

01-50

DTC		DTC text	Corrective action
SAE	VAG		
P1648	18056	Powertrain CAN-bus faulty	- Check data exchange between Engine Control Module (ECM) and other CAN capable control modules ⇒ Page 24-178
P1649	18057	Powertrain CAN-bus Missing message from ABS control module	
P1650	18058	Powertrain CAN-bus Missing message from instrument cluster	
P1654	18085	Check DTC memory of the instrument cluster	⇒ *Repair Manual, Electrical Equipment, Repair Group 01, On Board Diagnostic (OBD) of instrument cluster*
P1682	18090	Powertrain CAN-bus Implausible message from ABS control module	- Check data exchange between Engine Control Module (ECM) and other CAN capable control modules ⇒ Page 24-178
P1853	18261	Powertrain CAN-bus Implausible message from ABS control module	

cardiagn.com

01-51

Output Diagnostic Test Mode (DTM) (function 03)

Notes:

- *Output Diagnostic Test Mode (DTM) is only possible with engine idle and ignition switched on.*
- *The electric Fuel Pump (FP) runs during all of output Diagnostic Test Mode (DTM).*
- *In output Diagnostic Test Mode (DTM), individual actuators (with the exception of the fuel injectors) are activated for approximately 1 minute unless the next actuator is selected earlier by pressing the ▶ button.*
- *Actuators are checked either acoustically or by touch.*
- *Output Diagnostic Test Mode (DTM) is aborted if engine is started or an RPM signal is recognized.*
- *Before re-initiating output Diagnostic Test Mode (DTM), engine must be started and the ignition must be switched off and on again.*

cardiagn.com

01-52

Output Diagnostic Test Mode (DTM) activates the following components in the specified sequence:

Activation sequence	
1	Evaporative Emission (EVAP) canister purge regulator valve -N80-
2	Secondary Air Injection (AIR) solenoid valve -N112-
3	Secondary Air Injection (AIR) pump relay -J299-
4	Wastegate bypass regulator valve -N75-
5	Camshaft adjustment
6	Leak Detection Pump (LDP) tank ventilation system
7	Recirculating valve for turbocharger -N249-
8	Cylinder 1 fuel injector -N30-
9	Cylinder 3 fuel injector -N32-
10	Cylinder 4 fuel injector -N33-
11	Cylinder 2 fuel injector -N31-
12	Brake system vacuum pump[1)]

[1)] Only vehicles with automatic transmission

Test requirement:

cardiagn.com

- Fuses for engine electronics OK

⇒ *Electrical Wiring Diagrams, Troubleshooting & Component Locations*

cardiagn.com

01-53

Test sequence

- Connect VAS5051 tester ⇒ Page 01-7 and select vehicle system "01 - Engine electronics". Ignition must remain switched on for this.

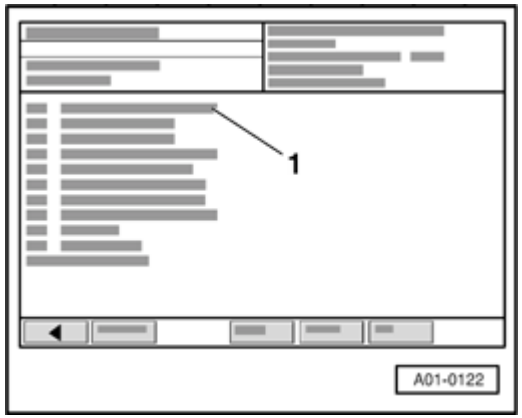

➢ Display on VAS5051:

- In selection -1-, click on the diagnostic function "03 - On Board Diagnostic (OBD)".

cardiagn.com

01-54

Activating the EVAP canister purge regulator valve (tank ventilation valve)

Note:

The Fuel Pump (FP) relay must trigger, the Fuel Pump (FP) must run, flowing noise at fuel pressure regulator is clearly audible. If Fuel Pump (FP) does not run, check activation ⇒ Page 24-55 .

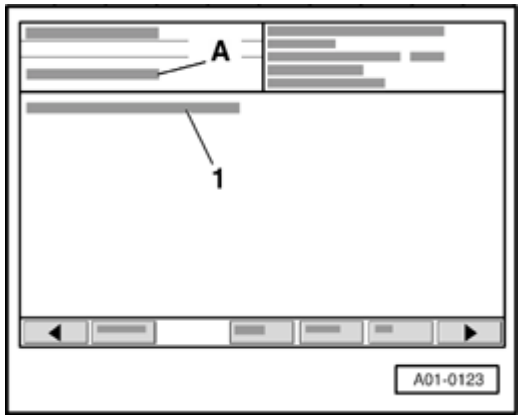

Display on VAS5051:

A - 1. Actuator in test

1 - EVAP canister purge regulator valve -N80-

- This valve is activated for approx. 1 minute (clicks), unless ▶ button is pressed first to switch to the next actuator.

If valve is not activated (does not click):

- Check Evaporative Emission (EVAP) canister purge regulator valve -N80- ⇒ Page 24-114 .

cardiagn.com

01-55

Activating the Secondary Air Injection (AIR) solenoid valve

- Press ▶button

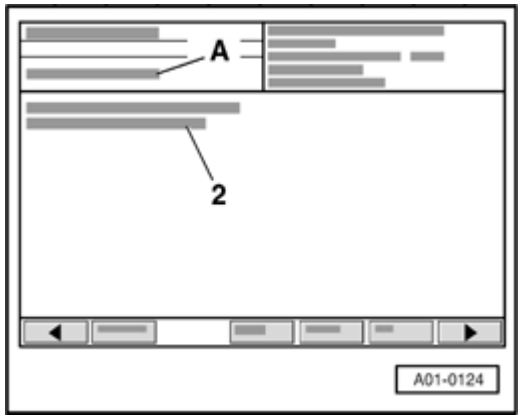

Display on VAS5051:

A - 2. Actuator in test

- This valve is activated for approx. 1 minute (clicks), unless ▶button is pressed first to switch to the next actuator.

If valve is not activated (does not click):

- Check Secondary Air Injection (AIR) solenoid valve -N112-:

⇒ *Repair Manual, 1.8 Liter 4-Cyl. 5V Turbo Engine Mechanical, Engine Code(s): AWM, Repair Group 26; Checking Secondary Air Injection (AIR) system*

cardiagn.com

01-56

Activating the Secondary Air Injection (AIR) pump relay

- Press ▶button

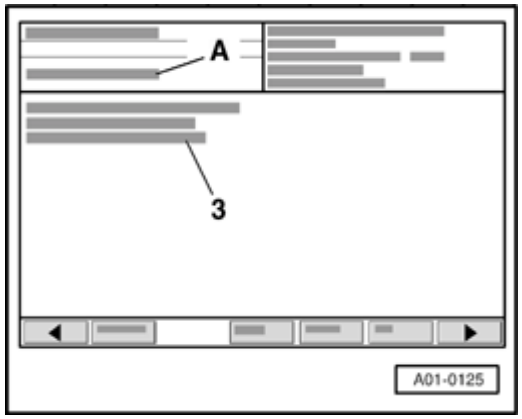

Display on VAS5051:

A - 3. Actuator in test

3 - Secondary Air Injection (AIR) pump relay -J299-

- The Secondary Air Injection (AIR) pump relay -J299- (in 3-socket relay carrier in the E-box, at left in the plenum chamber , position 2) switches the Secondary Air Injection (AIR) pump motor -V101- on and off in intervals for approx. 1 minute unless the next actuator is selected first by pressing the ▶button.

If the Secondary Air Injection (AIR) pump motor does not start up in intervals:

- Check Secondary Air Injection (AIR) pump relay -J299-:

⇒ *Repair Manual, 1.8 Liter 4-Cyl. 5V Turbo Engine Mechanical, Engine Code(s): AWM, Repair Group 26; Checking Secondary Air Injection (AIR) system*

cardiagn.com

01-57

Activating wastegate bypass regulator valve - N75-

- Press ▶button

Display on VAS5051:

A - 4. Actuator in test

4 - Wastegate bypass regulator valve -N75-

- This valve is activated for approx. 1 minute (clicks), unless ▶button is pressed first to switch to the next actuator.

If valve is not activated (does not click):

⇒ *Repair Manual, 1.8 Liter 4-Cyl. 5V Turbo Engine Mechanical, Engine Code(s): AWM, Repair Group 21, Charge air system with turbocharger*

cardiagn.com

01-58

Activating camshaft adjustment valve

- Press ▶button

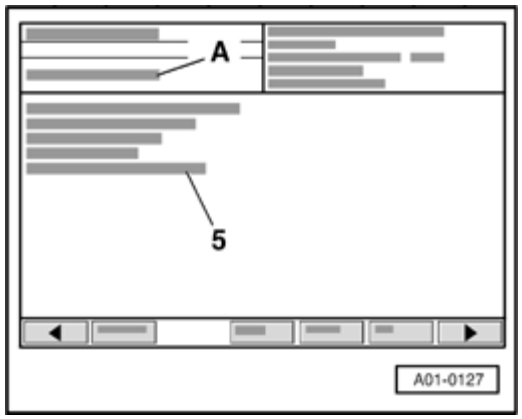

Display on VAS5051:

A - 5. Actuator in test

5 - Camshaft adjustment

- This valve is activated for approx. 1 minute (clicks), unless ▶button is pressed first to switch to the next actuator.

If valve is not activated (does not click):

- Check camshaft adjustment valve:

⇒ *Repair Manual, 1.8 Liter 4-Cyl. 5V Turbo Engine Mechanical, Engine Code(s): AWM, Repair Group 15; Checking camshaft adjustment*

cardiagn.com

01-59

Activating Leak Detection Pump (diagnostic pump for tank ventilation system)

- Press ▶button

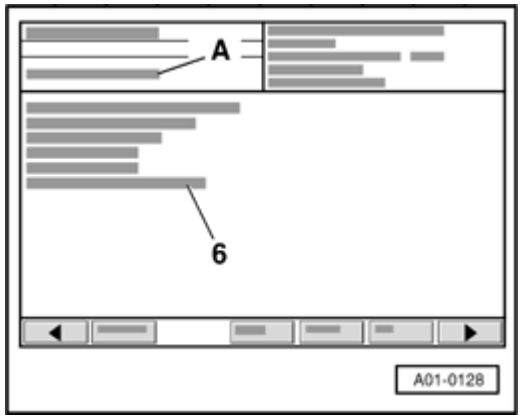

Display on VAS5051:

A - 6. Actuator in test

6 - Leak Detection Pump (LDP) tank ventilation system

- Th change-over valve in the LDP is activated for approximately 1 minute (clicks), unless ▶button is pressed first to switch to the next actuator.

Note:

The click can be heard by listening near the rear left wheelhousing.

If valve is not activated (does not click):

⇒ *Repair Manual, 1.8 Liter 4-Cyl. 5V Turbo Engine Mechanical, Engine Code(s): AWM, Repair Group 20; components of the EVAP canister system, servicing; Leak Detection Pump (LDP) -V144-, checking.*

cardiagn.com

01-60

Turbocharger boost pressure recirculation valve, activating

- Press ▶button

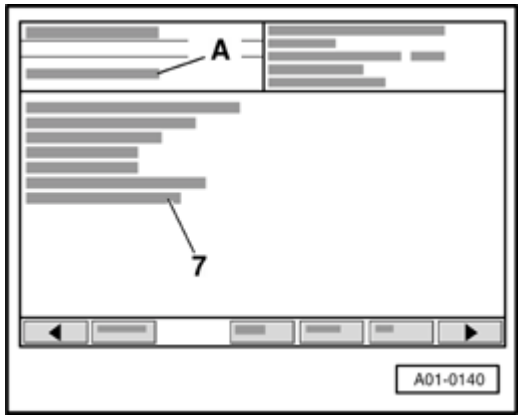

Display on VAS5051:

A - 7. Actuator in test

7 - Recirculating valve for turbocharger -N249-

- This valve is activated for approx. 1 minute (clicks), unless ▶button is pressed first to switch to the next actuator.

If valve is not activated (does not click):

⇒ *Repair Manual, 1.8 Liter 4-Cyl. 5V Turbo Engine Mechanical, Engine Code(s): AWM, Repair Group 21, Charge air system with turbocharger*

cardiagn.com

01-61

Activating fuel injectors

Note:

Fuel injectors are activated according to ignition sequence: Cyl. 1, Cyl. 3, Cyl 4, Cyl. 2.

- Press ▶ button

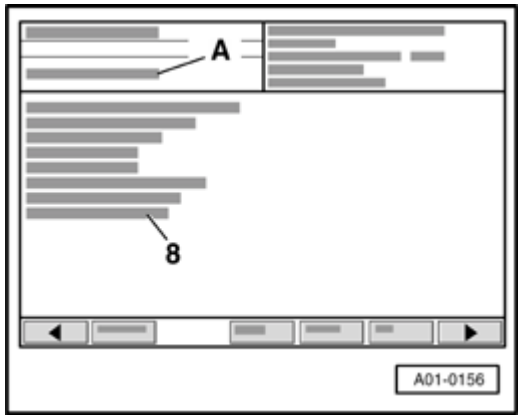

Display on VAS5051:

A - 8. Actuator in test

8 - Cylinder 1 fuel injector -N30-

- Press ▶ button

◆ Fuel injector must click 5 times after ▶button is pressed.

If injector does not click:

- Check fuel injectors ⇒ Page 24-37 .

cardiagn.com

01-62

- Press ▶ button

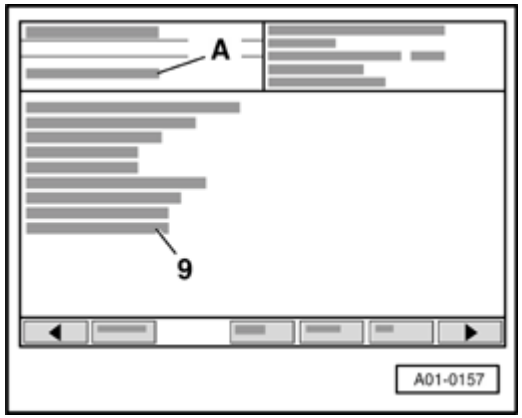

➤ Display on VAS5051:

A - 9. Actuator in test

9 - Cylinder 3 Fuel Injector -N32-

- Press ▶ button

◆ Fuel injector must click 5 times after ▶button is pressed.

If injector does not click:

- Check fuel injectors ⇒ Page 24-37 .
- Press ▶ button

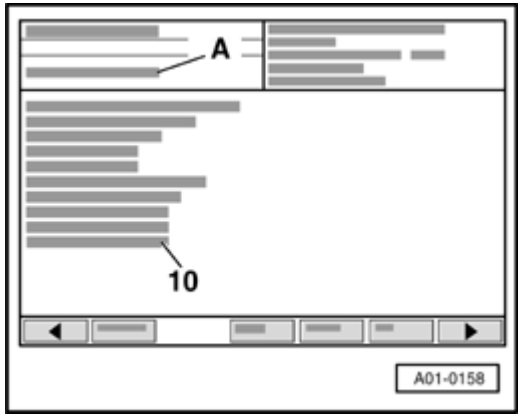

➤ Display on VAS5051:

A - 10. Actuator in test

10 - Cylinder 4 Fuel Injector -N33-

- Press ▶ button

◆ Fuel injector must click 5 times after ▶button is pressed.

If injector does not click:

- Check fuel injectors ⇒ Page 24-37 .

cardiagn.com

01-63

- Press ▶ button

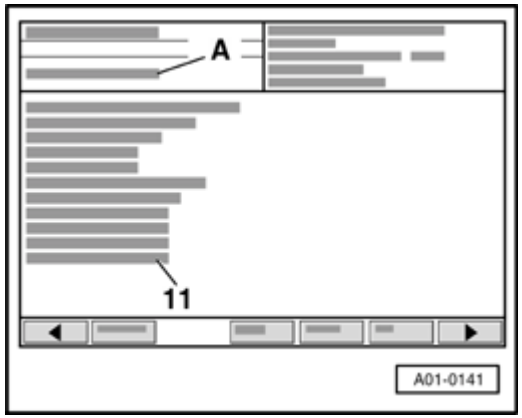

➢ Display on VAS5051:

A - 11. Actuator in test

11 - Cylinder 2 Fuel Injector -N31-

- Press ▶ button

◆ Fuel injector must click 5 times after ▶button is pressed.

If injector does not click:

- Check fuel injectors ⇒ Page 24-37 .

cardiagn.com

01-64

Activate brake system vacuum pump[1)]

[1)] Only vehicles with automatic transmission

- Press ▶ button

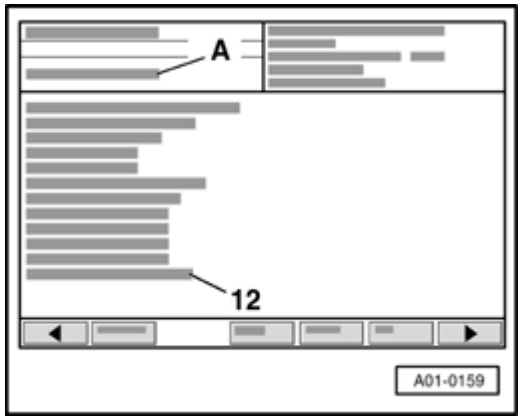

Display on VAS5051:

A - 12. Actuator in test

12 - Brake system vacuum pump

- The vacuum pump for brake booster on right at firewall must start up in intervals for approx. 1 minute, unless the ▶ button is pressed first to end On Board Diagnostic (OBD).

If the vacuum pump for brake booster does not start up in intervals:

- Check vacuum pump for brake booster:

⇒ *Repair Manual, Brake System, Repair Group 47*

cardiagn.com

01-65

End Output Diagnostic Test Mode (DTM)

- Press ▶ button

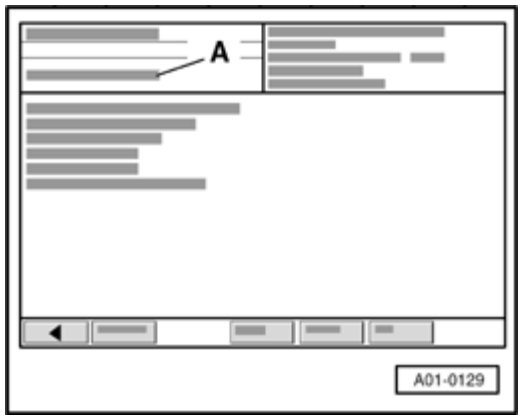

➢ Display on VAS5051:

A - Actuator test has ended

- End function "03 - output Diagnostic Test Mode (DTM)" by pressing ◀ button.

Note:

Before re-initiating output Diagnostic Test Mode (DTM), engine must be started and the ignition must be switched off and on again.

cardiagn.com

Basic setting (function 04)

With ignition on and engine at standstill, the following operations can be performed using "function 04", basic setting:

- Adapt throttle valve control module to Engine Control Module (ECM) ⇒ Display group 060(⇒ Page 24-125)
- Vehicles with automatic transmission: Adaptation of kick down function of accelerator pedal position sensor to ECM ⇒ Display group 063 (⇒ Page 24-145)

With engine running, the following operations can be performed using basic setting:

- Adaptation of oxygen sensor control ⇒ Page 24-75

cardiagn.com

Test requirements for operations with engine running:

- No DTCs in DTC memory.
- Coolant Temperature at least 80 °C.
- Electrical consumers switched off (radiator fan must NOT run during test).
- A/C switched off.
- Vehicles with automatic transmission Selector lever in P or N.

Test sequence

- Connect VAS5051 tester ⇒ Page 01-7 and select vehicle system "01 - Engine electronics". Ignition must remain switched on for this.

or, depending on desired operation:

- Start engine.

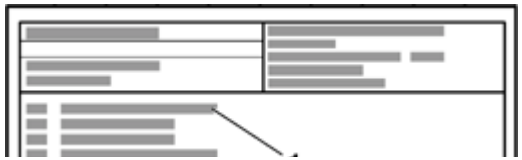

Display on VAS5051:

- In selection -1-, click on the diagnostic function "04 - Basic setting".

cardiagn.com

01-68

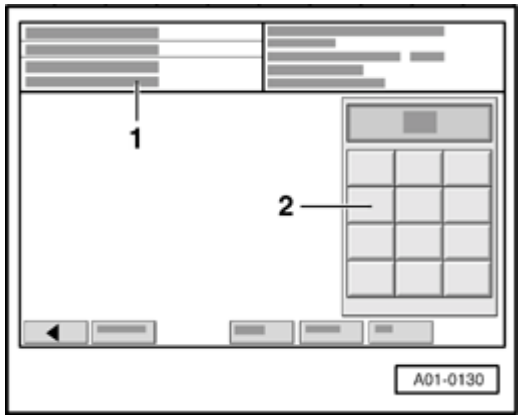

Display on VAS5051:

1 - Enter display group Max. input value = 255

- Enter desired 3-digit display group number in button field -2- and press -Q- button to confirm input.

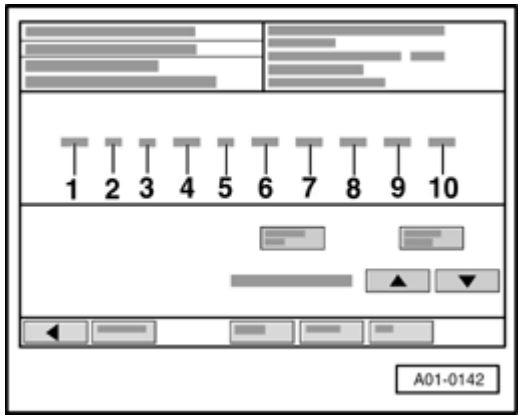

Indicated on VAS5051 for display group 000:

1 - Display group 0

2 - Display field 1 2 3 4 5 6 7 8 9 10

Note:

After selecting display group number, the EVAP valve is closed and A/C compressor switched off.

cardiagn.com

01-69

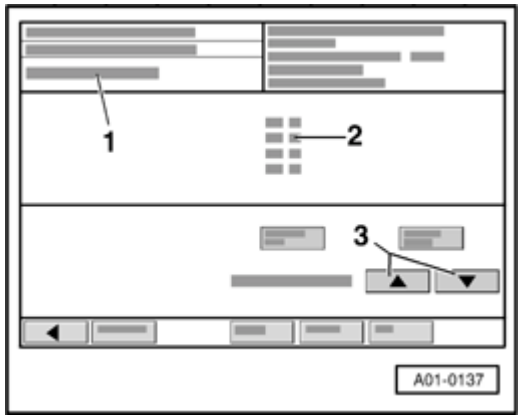

Indicated on VAS5051 for display group 001 to 255:

1 - Display group X System in basic setting

2 - Display field 1

Display field 2

Display field 3

Display field 4

Notes:

- *For display group number 000, measured values are displayed as a decimal.*
- *To switch to a different display group, proceed as follows:*

Display group	VAS5051 tester
higher	Press ▲ button.
Lower	Press ▼ button.

- End function "04 - Basic setting" by pressing ◀ button.

cardiagn.com

01-70

Display group 000 (indicated values decimal)		
• Engine running at idle (Coolant Temperature not less than 80 °C)		
1 2 3 4 5 6 7 8 9 10 ◀ Display fields	**Specified value**	**represents**
Adaptation value of mixture formation, partial throttle	103 to 153	-10 to 10%
Adaptation value of mixture formation, closed throttle (idle)	78 to 178	-10 to 10%
Control value of mixture formation	103 to 153	-10 to 10%
Adaptation value, torque loss at idle:	113 to 143	-3 to 3%
Torque at idle	106 to 189	-4.3 to 12.2%
Throttle valve angle	1 to 7	0.4 to 2.75%
Vehicle voltage	142 to 207	10 to 14.5 V
Engine speed (idle speed) • Front Wheel Drive (FWD) • All Wheel Drive (AWD)	 74 to 86 76 to 88	 740 to 860 RPM 760 to 880 RPM
Engine load (without consumers)	17 to 40	13 to 30%
Engine Coolant Temperature (requirement for basic setting)	180 to 205	80 to 105 °C

cardiagn.com

Code Control Module (function 07)

If control module does not indicate coding corresponding to vehicle, or if control module has been replaced, code it as follows.

Procedure

- Connect VAS5051 tester ⇒ Page 01-7 and select vehicle system "01 - Engine electronics". Ignition must remain switched on for this.

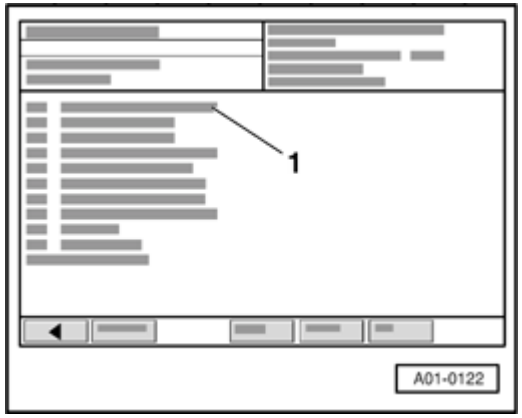

Display on VAS5051:

- Select diagnostic function "07 - Code control module" in selection -1-.

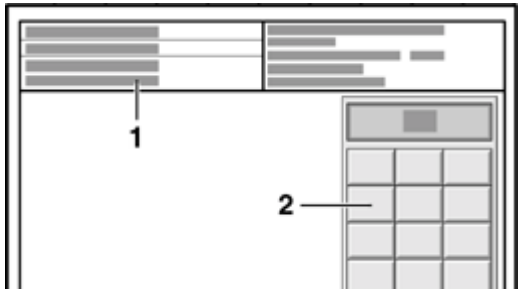

Display on VAS5051:

1 - Enter code Max. input value = 32767

- Enter control module coding in button field -2- according to coding table ⇒ Page 01-73 .

cardiagn.com

01-72

Clarification of coding

XX				Country/Exhaust
	X			Drive/Additional Functions
		X		Transmission
			X	Vehicle model

Coding example	
16501	USA ULEV [1] (emissions regulations), Front Wheel Drive (FWD) with ESP [2] , 5 speed automatic transmission, Audi A4

[1] ULEV: Abbreviation for Ultra Low Emission Vehicle

[2] ASR/ESP: Abbreviation for Anti-Slip Regulation/Electronic Stability Program

- Press -Q- button to confirm input.

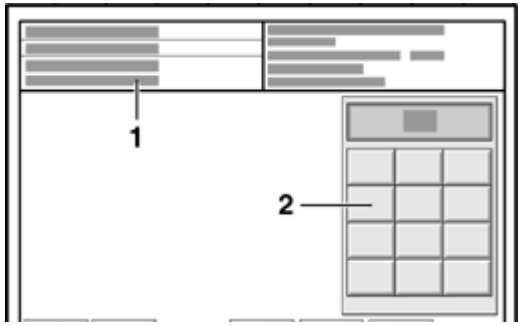

Display on VAS5051:

1 - Coding will be performed

- Wait until the next indication appears on display.

cardiagn.com

01-73

Coding table

Country/Exhaust	16			USA ULEV (emissions regulation)
Drive/Additional Functions		0		Front wheel drive with ABS
		2		All wheel drive with ABS
		5		Front Wheel Drive (FWD) with ASR/ESP:
		7		All Wheel Drive (AWD) with Electronic Stability Program (ESP)
Transmission			0	5 speed manual transmission
			5	Automatic transmission 01V
Vehicle model			1	Audi A4

cardiagn.com

Read Measuring Value Block (function 08)

Test requirements:

- Coolant Temperature at least 80 °C.
- Electrical consumers switched off (radiator fan must NOT run during test).
- A/C switched off.

Test sequence

- Connect VAS5051 tester ⇒ Page 01-7 and select vehicle system "01 - Engine electronics". Ignition must remain switched on for this.

or, depending on desired operation:

- Start engine.

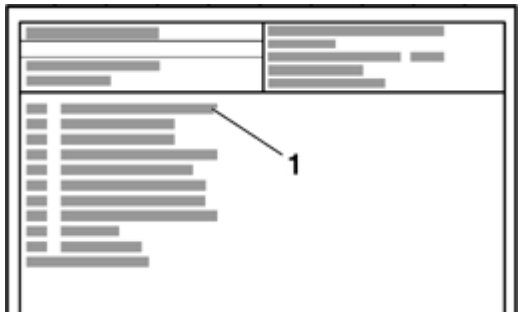

Display on VAS5051:

- Select diagnostic function "08 - read measured value block" in selection -1-.

cardiagn.com

01-75

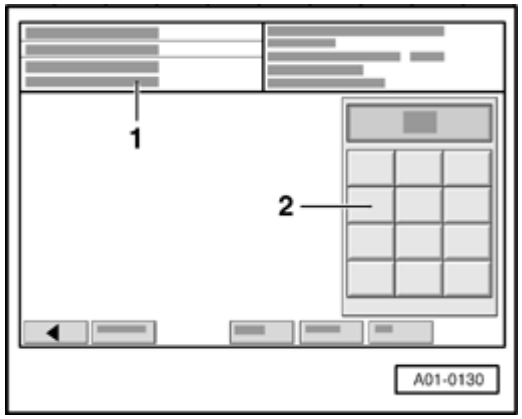

Display on VAS5051:

1 - Enter display group Max. input value = 255

- Enter desired 3-digit display group number in button field -2- and press -Q- button to confirm input.

Note:

Which display group should be chosen depends on current function and component tests.

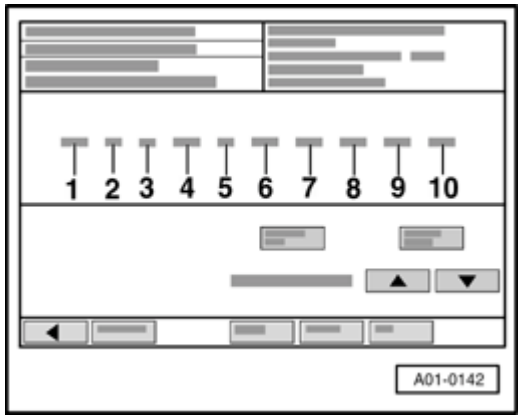

Indicated on VAS5051 for display group 000:

1 - Display group 0

2 - Display field 1 2 3 4 5 6 7 8 9 10

cardiagn.com

01-76

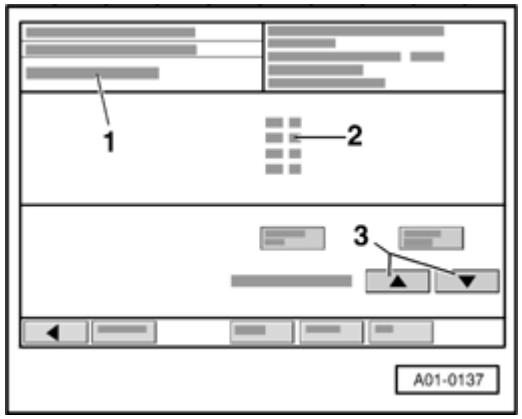

➢ Indicated on VAS5051 for display group 001 to 255:

1 - Display group X

2 - Display field 1

Display field 2

Display field 3

Display field 4

Notes:

- *If no display follows, a display field is not assigned.*
- *To switch to a different display group, proceed as follows:*

Display group	VAS5051 tester
higher	Press ▲ button.
Lower	Press ▼ button.

- Press "08 - erase DTC memory" to end function ◀ button.

cardiagn.com

Readiness code

The readiness code appears as an 8-digit display in measuring value block 086, display field 1. Each of the 8 digits is allocated to a specific exhaust related system.

During a test sequence which must be performed completely, On Board Diagnostic (OBD) checks the function of each of these systems and then changes the character assigned to it in the 8-digit indication from "1" to "0" once test has been performed successfully.

When the readiness code is generated after a successfully completed test sequence, it reads "0 0 0 0 0 0 0 0" (measuring value block 086, display field 1).

If a single test is completed entirely, but indicated as "not OK", a DTC will be stored in DTC memory. Check DTC Memory ⇒ Page 01-12 .

cardiagn.com

Readiness code is returned to "0 1 1 0 1 1 0 1" if:

- DTC memory was erased,
- Voltage supply to ECM was cut off (e.g. connector disconnected, battery disconnected)
- a new Engine Control Module (ECM) was installed

In this case, readiness code must be re-generated ⇒ Page 01-84 .

Note:

During driving operation in various load conditions, exhaust relevant tests are performed by the control module and the readiness code is generated on its own. In this case, however, the concluding control possibilities are not available, meaning that it will not be indicated whether the vehicle is free of malfunctions upon transfer to the customer.

cardiagn.com

Readiness code, checking

Test sequence

- Connect VAS5051 tester ⇒ Page 01-7 and select vehicle system "01 - Engine electronics". Engine must run at idle for this.

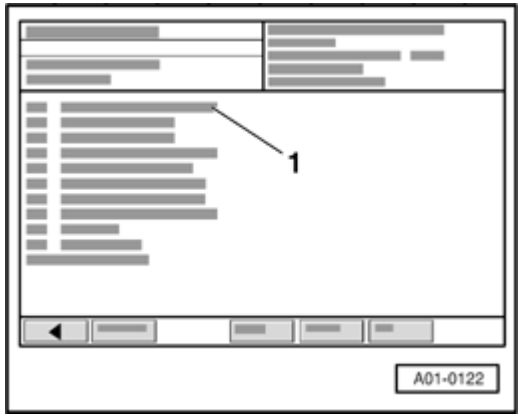

Display on VAS5051:

- Select diagnostic function "08 - read measured value block" in selection -1-.

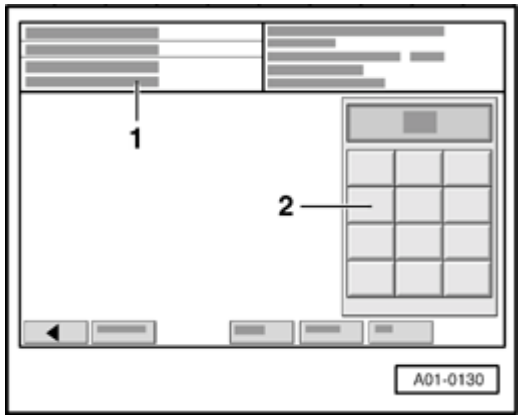

Display on VAS5051:

1 - Enter display group Max. input value = 255

- Select function "086" in button field -2- for "Display group number 086" and press Q button to confirm input.

cardiagn.com

01-80

➢ Display on VAS5051:

- Check readiness code in display field -1-.
  - ♦ Specification: 0 0 0 0 0 0 0 0

cardiagn.com

01-81

	Display fields			
	1	2	3	4
Display group 086: Readiness code				
Display	**0 0 0 0 0 0 0 0**	X X X X X X X X	X X X X X X X X	
Indicated	**Ready-Bits** **completed tests**	individual tests carried out	individual tests carried out	
Functional range	**1 = not completed** **0 = completed**	1 = not completed 0 = completed	1 = not completed 0 = completed	
Specified value	**0 0 0 0 0 0 0 0**	X X X X X X X X	X X X X X X X X	
Note	**Significance of readiness code** ⇒ **Page 01-82**			

Note for display field 1:

Display field 1 is the most important. This indicates which system was checked via On Board Diagnostic (OBD) since the last time DTC memory was erased or a new control module was implemented. Once DTC memory is erased, all testable values are set to "1", after the test is performed successfully, the values are set to "0".

cardiagn.com

01-82

X	X	X	X	X	X	X	X	Notes for display group 086, display field 1
								Diagnostic of catalytic converter ♦ Indication 0 = test was performed ♦ Indication 1 = test was not performed (generate readiness code ⇒ Page 01-84)
								Indication always 0
								EVAP system ♦ Indication 0 = test was performed ♦ Indication 1 = test was not performed (generate readiness code ⇒ Page 01-84)
								Secondary air system ♦ Indication 0 = test was performed ♦ Indication 1 = test was not performed (generate readiness code ⇒ Page 01-84)
								Indication always 0
								Oxygen sensors ♦ Indication 0 = test was performed ♦ Indication 1 = test was not performed (generate readiness code ⇒ Page 01-84)
								Oxygen sensor heating ♦ Indication 0 = test was performed

cardiagn.com

	♦ Indication 1 = test was not performed (generate readiness code ⇒ Page 01-84)
Indication always 0	

Note:

Readiness code is not generated until all indications in display field 1 display "0"

cardiagn.com

01-83

Once the specified value "0 0 0 0 0 0 0 0" is reached in display field 1:

- Click on ◀ - button

- Check DTC memory as a control measure ⇒ Page 01-12 (there must not be any DTCs stored)

If specified value is not obtained:

- Generate readiness code ⇒ Page 01-84 .

cardiagn.com

01-84

Readiness code, generating

Special Tools and Equipment

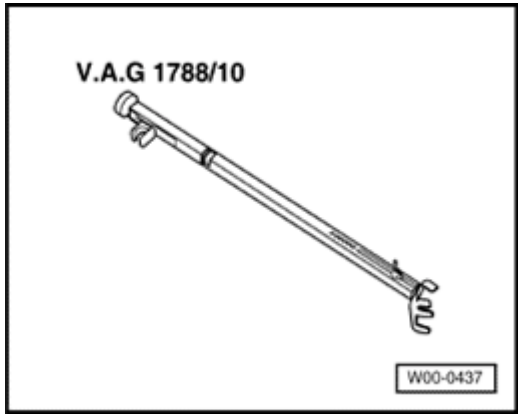

- VAG1788/10 RPM adjuster

Requirements

- Vehicle stationary
- Vehicles with automatic transmission Selector lever in P or N.
- Electrical consumers switched off (radiator fan must NOT run during test).
- A/C switched off.
- Coolant temperature at least 80 °C ⇒ Display group 004, display field 3. Important: Drive engine warm via road test if possible.

Important note:

If, during a work step, the test result is indicated as "OK" immediately after selecting a display group, the test has already been carried out and it is OK to continue on to the next work step.

cardiagn.com

Work step 1: Check DTC Memory

Test requirement:

- Engine not running, ignition switched on.

- Connect VAS5051 tester ⇒ Page 01-7 and select vehicle system "01 - Engine electronics". Ignition must remain switched on for this.

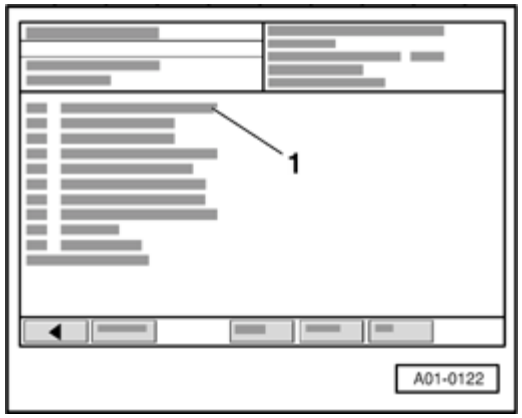

Display on VAS5051:

- In selection -1-, click on the diagnostic function "02 - Check DTC memory".

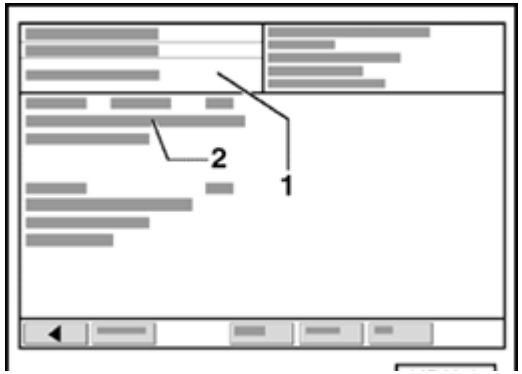

Display on VAS5051:

1 - DTC memory content:

- 0 malfunctions recognized

or

- X malfunctions recognized

cardiagn.com

2 - Malfunction

- DTC
- malfunction location
- malfunction type

cardiagn.com

01-86

If a DTC is stored:

- Repair malfunction, erase DTC memory. Road test vehicle and then check DTC memory as a control measure.

If no DTCs are stored:

- Click on ◀ - button

cardiagn.com

01-87

Work step 2: Erase DTC Memory

Test requirement:

- Engine not running, ignition switched on.

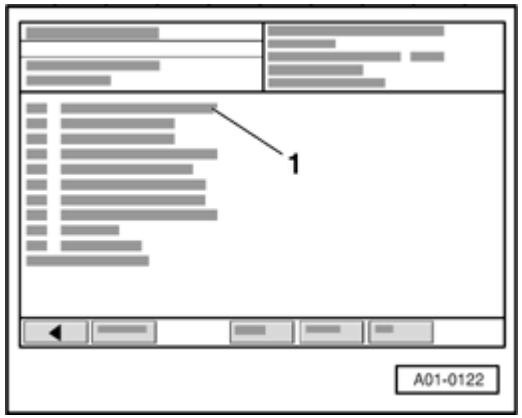

Display on VAS5051:

- In selection -1-, click on the diagnostic function "05 - Check DTC memory".

Note:

When DTC memory is erased, readiness code is reset and must therefore be re-generated.

Display on VAS5051:

1 - ♦ no indication (before erasing)

or

♦ DTC memory erased

2 - Note:Perform the function?Note: Data is being erased !

- Press on "OK" button in display -2-.
- Click on ◀ - button

cardiagn.com

01-88

Work step 3: Adapt throttle valve control module to Engine Control Module (ECM)

Test requirement:

- Engine not running, ignition switched on.

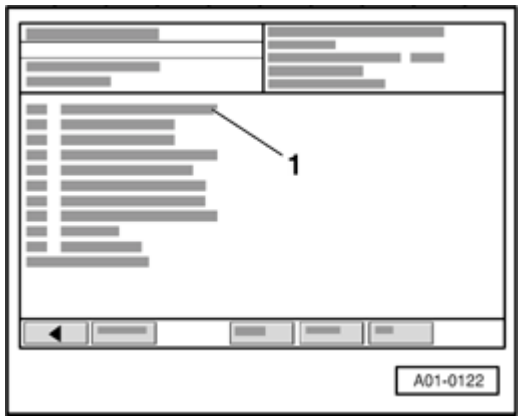

Display on VAS5051:

- In selection -1-, click on the diagnostic function "04 - Basic setting".

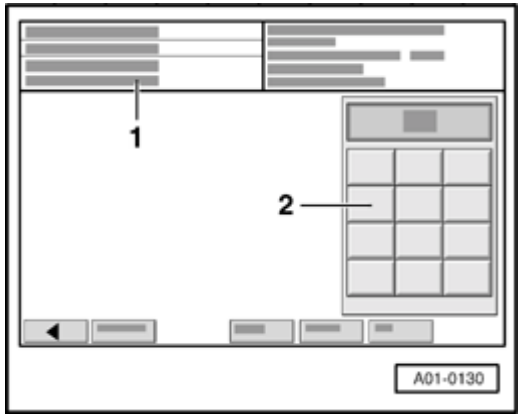

Display on VAS5051:

1 - Enter display group Max. input value = 255

- Select function "060" in button field -2- for "display group number 060" and press Q button to confirm input.

cardiagn.com

01-89

➢ Display on VAS5051:

- Check specified values in display fields -3- and -4-.

cardiagn.com

01-90

	Display fields			
	1	2	3	4
Display group 060: Adaptation of throttle valve control module				
Display	xx %	xx %	**x**	**---**
Indicated	Throttle valve angle (angle sensor 1)	Throttle valve angle (angle sensor 2)	**Adaptation step counter**	**Adaptation condition**
Functional range			**0 to 8**	**ADP in progress** **ADP OK** **ERROR**
Specified value	3 to 93 %	97 to 3 %	**8**	**ADP OK**
Note			**After adaptation, the adaptation step counter reaches the number 8 (it is OK for numbers to be skipped).**	**If "ERROR." is displayed: Check DTC memory ⇒ Page 01-12 .** **If specified value is not obtained: ⇒Note, ⇒ Page 24-130**

Note for display field 3:

Different numbers are shown in display field 3 during adaptation that represent the current adaptation condition. It is not particularly important how the adaptation step counter (display field 3) behaves during adaptation, but rather that display field

cardiagn.com

4 indicates the specification "ADP OK" after adaptation.

If specified value "ADP OK" is obtained:

- Perform next work step.

cardiagn.com

01-91

Work step 4: Kick down function, adapting[1)]

[1)] Only vehicles with automatic transmission

Test requirement:

- Engine not running, ignition switched on.

Display on VAS5051:

- Press ▲ button 3 times to change into display group 063.

Note:

There will be a prompt: "Operate kick down".

- Depress accelerator pedal completely, past kick down point, and hold down.

Note:

During adaptation of the kick down point, "Kick down ADP in progress" will be indicated in display. After successful adaptation of the kick down point, "Kick down ADP OK" will be indicated on display.

- Check specified value in display field -4-.

cardiagn.com

01-92

	Display fields			
	1	2	3	4
Display group 063: Kick down function, adapting				
Display	xx %	xx %	**Kick down**	**---**
Indicated	Sensor 1 for Pedal position	learned kick down value for Throttle Position (TP) sensor	**Kick down**	**Adaptation condition**
Functional range			**Kick down**	**operate** **ADP in progress** **ADP OK** **ERROR**
Specified value	79 to 94 %	79 to 94 %	**Kick down**	**ADP OK**
Note				**If "ERROR." is displayed: Check DTC memory ⇒ Page 01-12 .**

Note for display field 4:

"ERROR" can be indicated, for example, if the accelerator pedal is not immediately pressed in response to a request by the tester or if the accelerator pedal is released while adaptation is running despite the fact that adaptation is not yet complete. In both cases, "Basic Setting" must be exited and the adaptation must be performed again.

cardiagn.com

If specified value "ADP OK" is obtained:

- Perform next work step.

cardiagn.com

01-93

Work step 5: Check operating condition of oxygen sensor control

- Start engine (for a vehicle with manual transmission: engage clutch).

Note:

If necessary, vehicle system "01 - engine electronics" and diagnostic function "04 -basic setting" must be selected again after engine start.

- Install VAG1788/10 RPM adjuster on the accelerator pedal and raise the engine speed to 2600 RPM.

Test requirement:

- Engine running at 2600 RPM.

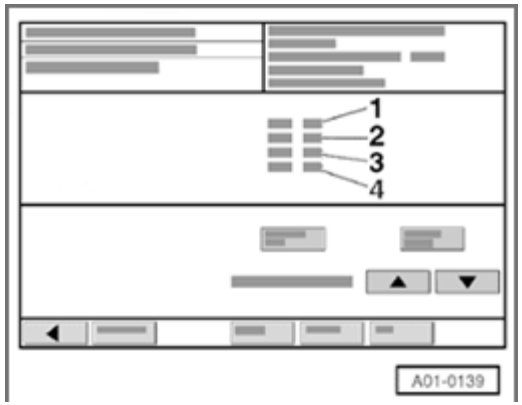

Display on VAS5051:

- Click on ◀ - button

cardiagn.com

01-94

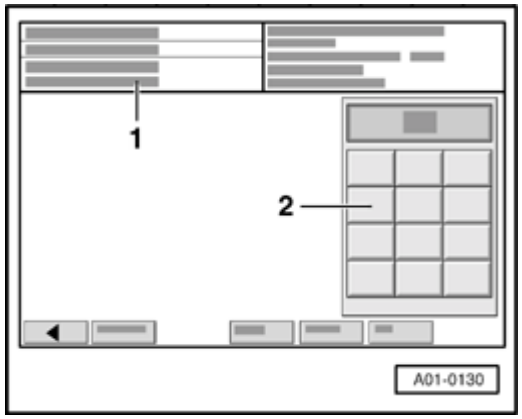

Display on VAS5051:

1 - Enter display group Max. input value = 255

- Select function "030" in button field -2- for "display group number 030" and press Q button to confirm input.

Display on VAS5051:

- Check oxygen sensor status in display fields -1- and -2-.

Note:

A few minutes may pass until a diagnostic result is reached.

cardiagn.com

01-95

	Display fields			
	1	2	3	4
Display group 030: Oxygen sensor status				
Display	**X X X**	**X X X**		
Indicated	**Oxygen sensor status, bank 1, sensor 1**	**Oxygen sensor status, bank 2, sensor 1**		
Functional range	**0 = off** **1 = on**	**0 = off** **1 = on**		
Specified value	**1 1 1**	**1 1 0**		

Significance of 3 digit indications in display group 030			
X	X	X	**Display fields 1 and 2**
		X	Oxygen sensor control: 0= not active; 1 = active
	X		Operational readiness of oxygen sensor: 0= not active; 1 = active
X			Condition of oxygen sensor heater: 0= not active; 1 = active

Notes:

- *The first position of the 3 digit indication (heating) fluctuates between 0 and 1 at certain operation points.*
- *Oxygen sensor control of oxygen sensor behind catalytic converter (bank 1, sensor 2) is not active without engine load, meaning that the third position of the 3-digit display is 0.*

- Do not start test until indication in display field 1

cardiagn.com

has reached "111" at least once and indication in display field 2 has reached "110" at least once.

cardiagn.com

01-96

Work step 6: Diagnostic of oxygen sensor aging before catalytic converter

Test requirement:

- Engine continues to run at 2600 RPM.

Display on VAS5051:

- Press ▲ button 4 times to change into display group 034.
- Check specified value in display field -4-.

Note:

A few minutes may pass until a diagnostic result is reached.

cardiagn.com

01-97

	Display fields			
	1	2	3	4
Display group 034: Oxygen sensor aging diagnostic, oxygen sensor before catalytic converter (bank 1)				
Display	xxxx/min	xxx °C	x.x	---
Indicated	Engine speed (RPM)	Exhaust temperature	Dynamic factor	Diagnostic condition
Functional range				Test OFF Test ON B1-S2 OK B1-S2 not OK
Specified value	2600 RPM	larger than 350 °C	0.5 to 2.5	B1-S2 OK
Note				**If "B1-S1 not OK" is displayed: Check DTC memory** ⇒ **Page 01-12** **.**

If specified value "B1-S1 OK" is obtained:

- Perform next work step.

cardiagn.com

01-98

Work step 7: Diagnostic of operational readiness of oxygen sensor behind catalytic converter

Test requirement:

- Engine continues to run at 2600 RPM.

Display on VAS5051:

- Press ▲ button 2 times to change into display group 036.
- Check specified value in display field -2-.

cardiagn.com

01-99

	Display fields			
	1	2	3	4
Display group 036: Operational readiness of oxygen sensor behind catalytic converter (bank 1)				
Display	x.xxx V	**---**		
Indicated	Oxygen sensor voltage Bank 2, sensor 1	**Diagnostic condition**		
Functional range		**Test OFF** **Test ON** **B1-S2 OK** **B1-S2 not OK**		
Specified value	0.100 to 0.950 volts	**B1-S2 OK**		
Note		**If "B1-S2 not OK" is displayed: Check DTC memory ⇒ Page 01-12**		

If specified value B1-S2 OK" is obtained:

- Perform next work step.

cardiagn.com

01-100

Work step 8: Diagnostic of oxygen sensor control system

Test requirement:

- Engine continues to run at 2600 RPM.

Display on VAS5051:

- Press ▲ button to change into display group 037.
- Check specified value in display field -4-.

cardiagn.com

01-101

	Display fields			
	1	2	3	4
Display group 037: Diagnostic of oxygen sensor control system (Bank 1)				
Display	xxx %	x.xxx V	x.xx	**---**
Indicated	Load	Oxygen sensor voltage Bank 2, sensor 1	Oxygen sensor correction value between bank 1, sensor 1 and bank 1, sensor 2	Diagnostic condition
Functional range				**Test OFF** **Test ON** **System OK** **System not OK**
Specified value	13 to 40 %	0.100 to 0.950 volts	smaller than 0.02	System OK
Note				**If "System not OK" is displayed: Check DTC memory** ⇒ **Page 01-12**

If specified value "Syst. OK" is obtained:

- Perform next work step.

cardiagn.com

01-102

Work step 9: Diagnostic of oxygen sensor aging behind catalytic converter

Test requirement:

- Engine continues to run at 2600 RPM.

Display on VAS5051:

- Click on ◀ - button

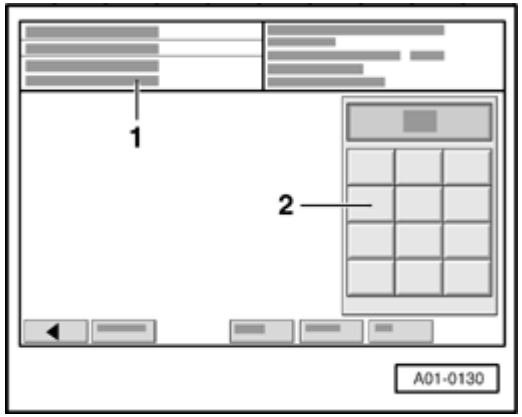

Display on VAS5051:

1 - Enter display group Max. input value = 255

- Select function "043" in button field -2- for "display group number 043" and press Q button to confirm input.

cardiagn.com

01-103

Display on VAS5051:

- Check specified value in display field -4-.

cardiagn.com

01-104

	Display fields			
	1	2	3	4
Display group 043: Oxygen sensor aging diagnostic, oxygen sensor behind catalytic converter (bank 1)				
Display	xxxx/min	xxx °C	x.xxx V	---
Indicated	Engine speed (RPM)	Exhaust temperature	Oxygen sensor voltage Bank 2, sensor 1	Diagnostic condition
Functional range				Test OFF Test ON B1-S2 OK B1-S2 not OK
Specified value	2600 RPM	larger than 350 °C	0.100 to 0.950 volts	B1-S2 OK
Note				**If "B1-S2 not OK" is displayed: Check DTC memory** ⇒ **Page 01-12**

If specified value B1-S2 OK" is obtained:

- Perform next work step.

cardiagn.com

01-105

Work step 10: Diagnostic of catalytic converter

Test requirement:

- Engine continues to run at 2600 RPM.

Display on VAS5051:

- Press ▲ button 3 times to change into display group 046.
- Check specified values in display fields -2- and -4-.

Note:

Catalytic converter diagnostic lasts approx. 60 seconds.

cardiagn.com

01-106

	Display fields			
	1	2	3	4
Display group 046: Diagnostic of catalytic converter (bank 1)				
Display	xxxx/min	**xxx °C**	x.xx	**---**
Indicated	Engine speed (RPM)	**Exhaust temperature**	Measurement Catalytic converter - conversion	Diagnostic condition
Functional range			0 to 8	Test OFF Test ON Cat B1 OK Cat B1 not OK
Specified value	2600 RPM	**550 to 700 °C**	Larger than 1.0	Cat B1 OK
Note		**As long as the exhaust temperature is not within the specified range, the test will not be initiated. If necessary, increase or decrease RPM**		**If "Cat B1 not OK" is displayed: Check DTC memory ⇒ Page 01-12 . If no DTCs are stored, replace catalytic converter.**

If specified value "Cat B1 OK" is obtained:

- Perform next work step.

cardiagn.com

01-107

Work step 11: Diagnostic of tank ventilation valve

- Remove the VAG1788/10 RPM adjuster and leave engine running at idle.

Test requirement:

- Engine running at idle:

Display on VAS5051:

- Click on ◀ - button

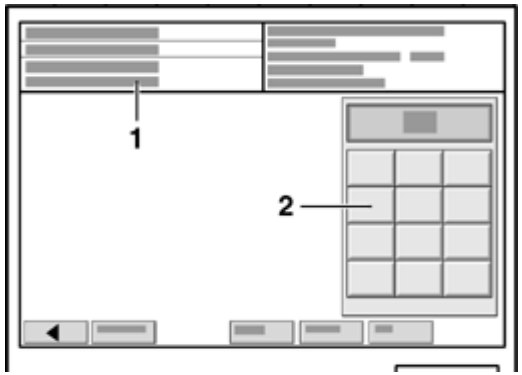

Display on VAS5051:

1 - Enter display group Max. input value = 255

- Select function "070" in button field -2- for "display group number 070" and press Q button to confirm input.

cardiagn.com

01-108

Display on VAS5051:

- Check specified value in display field -4-.

Note:

If test is not initiated or if indication switches from "Test ON" to "Test OFF", depress accelerator pedal briefly, test will be repeated.

cardiagn.com

01-109

	Display fields			
	1	2	3	4
Display group 070: Diagnostic of tank ventilation valve				
Display	xx %	xx %		**---**
Indicated	Degree tank ventilation valve is opened	Oxygen sensor control Diagnostic value		**Diagnostic condition**
Functional range				**Test OFF** **Test ON** **TVV OK** **TVV not OK** **Aborted**
Specified value	0 to 99 %	less than -7 % or greater than 7 %		**TVV OK**
Note				**If "TVV not OK" is displayed: Check DTC memory ⇒ Page 01-12 . Check Evaporative Emission (EVAP) canister purge regulator valve -N80- ⇒ Page 24-114**

If specified value "TVV OK" is obtained:

cardiagn.com

- Perform next work step.

cardiagn.com

01-110

Work step 12: Diagnostic of Secondary Air Injection (AIR) system

Test requirement:

- Engine running at idle:

Display on VAS5051:

- Click on ◀ - button

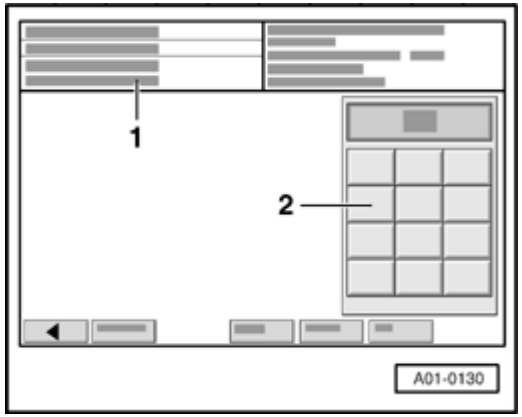

Display on VAS5051:

1 - Enter display group Max. input value = 255

- Select function "077" in button field -2- for "display group number 077" and press Q button to confirm input.

cardiagn.com

01-111

Display on VAS5051:

- Depress gas pedal completely (swiftly) and then release it (brief acceleration of at least 2500 RPM).
- Check specified value in display field -4-.

Note:

Secondary Air Injection (AIR) system test lasts approx. 60 seconds.

cardiagn.com

01-112

	Display fields			
	1	2	3	4
Display group 077: Secondary Air Injection (AIR) system diagnostic (Bank 1)				
Display	xxxx/min	xx.x g/s	xx %	**---**
Indicated	Engine speed (RPM)	Air mass	Relative air mass bank 1, Secondary Air Injection (AIR) system	**Diagnostic condition**
Functional range				**Test OFF** **Test ON** **System OK** **System not OK** **Aborted**
Specified value	FWD: 740 to 860 RPM AWD: 760 to 880 RPM	2 to 5 g/s	more than -20 %	System OK
Note				**If "System not OK" is displayed: Check DTC memory ⇒ Page 01-12**

If specified value "Syst. OK" is obtained:

cardiagn.com

- Click on ◀ - button

Work step 13: Read readiness code

- Read readiness code ⇒ Page 01-79 .

cardiagn.com

24-1

Motronic injection system, servicing

Safety precautions

If special testing equipment is required during road test, note the following:

WARNING!

- ***Test equipment must always be secured to the rear seat and operated from there by a second person.***

- ***If test and measuring equipment is operated from the passenger seat, the person seated there could be injured in the event of an accident involving deployment of the passenger-side airbag.***

To reduce the risk of personal injury and/or damage to the fuel injection and ignition system, always observe the following:

- Only disconnect and reconnect wires for injection and ignition system, including test leads, when ignition is turned off.

- If engine is to be cranked at starting RPM without starting (e.g. for compression testing),

cardiagn.com

disconnect connector from ignition coils and from fuel injectors.

cardiagn.com

24-2

- It is possible that the control module will recognize a malfunction and store a DTC during some tests. After completing all tests and repairs, DTC memory should therefore be checked and erased if necessary. Readiness code must be generated after DTC memory is erased ⇒ Page 01-84 .

- Always switch ignition off before cleaning engine.

- The battery should only be disconnected and reconnected when the ignition is turned off, since otherwise the Engine Control Module (ECM) can be damaged.

WARNING!

Fuel system is under pressure! Before opening system, place rags around the connection point. Then release pressure by carefully loosening connection.

cardiagn.com

24-3

Rules of cleanliness

When working on the fuel supply or fuel injection systems, the following "6 rules of cleanliness" should be carefully observed:

- Thoroughly clean all connections and the surrounding area before disconnecting.
- Place parts that have been removed on a clean surface and cover. Use lint-free cloths only!
- Carefully cover over opened components or seal, if repairs are not carried out immediately.
- Only install clean components: Only unpack replacement parts immediately prior to installation. Do not use parts that have been stored loose (in tool boxes etc.)
- When the system is open: Do not work with compressed air if it can be avoided. Do not move vehicle unless absolutely necessary.
- Disconnected electrical harness connectors: Protect from dirt and moisture. Be sure harness connector is dry before connecting.

cardiagn.com

24-4

Technical data

Engine identification		AWM (1.8 L / 5V/ 125 kW-engine)
Idle speed Engine speed cannot be adjusted, it is regulated by idle stabilization	Front Wheel Drive (FWD) All Wheel Drive (AWD)	740 to 860 RPM 760 to 880 RPM
Engine speed (RPM) limitation via fuel injector shut-off		about 6800 RPM
Fuel pressure at idle speed	Vacuum hose connected	about 3.5 bar positive pressure
	Vacuum hose disconnected	about 4.0 bar positive pressure
Residual pressure after 10 min.		at least 2.5 bar positive pressure
Fuel injectors	Injection stream	Dual-hole nozzle / same for all injectors
	Injection quantity (30 s)	135 ± 10 ml
	Resistance (room temperature)	12 to 13 Ω

cardiagn.com

24-5

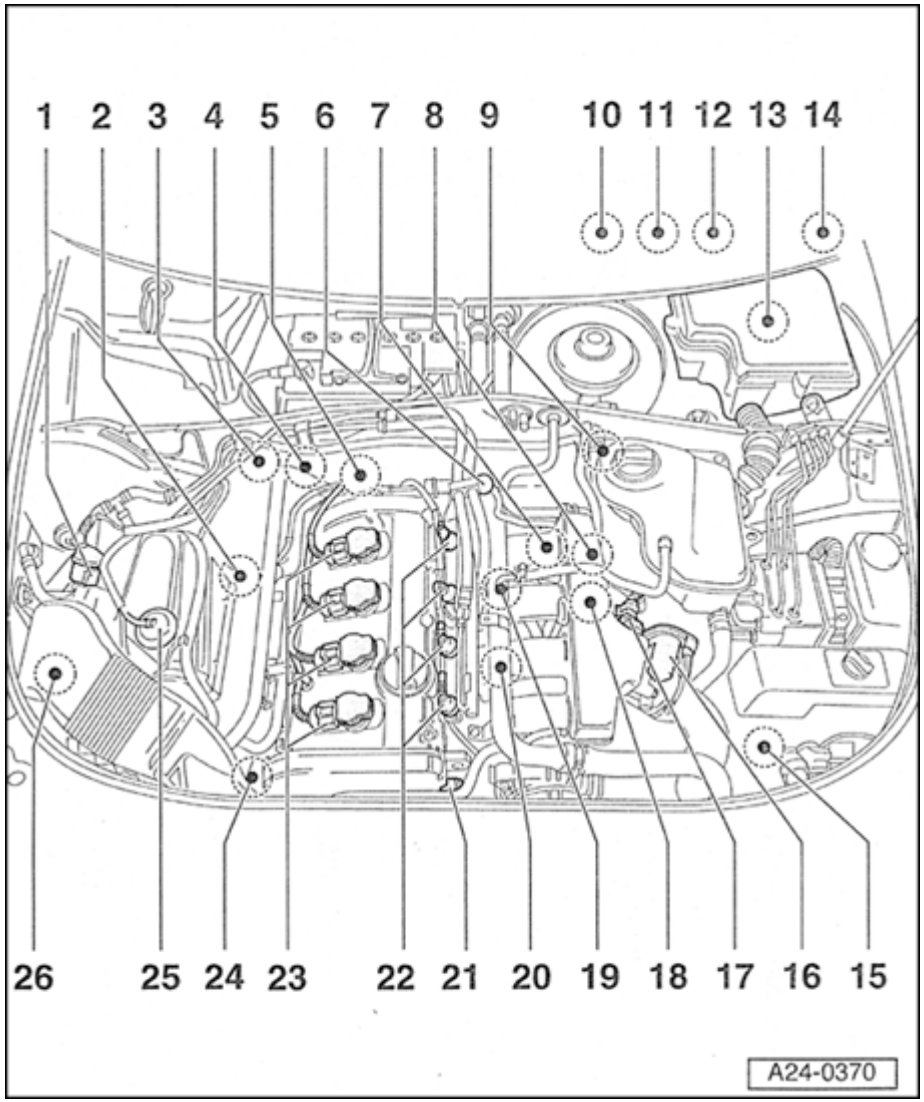

Component locations, overview

Note:

Component location without illustration:

---- - Leak Detection Pump (LDP) -V144-

- Below rear left wheelhousing liner

1 - Evaporative Emission (EVAP) canister purge regulator valve -N80-

- Checking ⇒ Page 24-114

2 - Heated Oxygen Sensor (HO2S) -G39- before catalytic converter, 55 Nm

- Constant oxygen sensor
- Check Oxygen Sensor (O2S) and oxygen sensor control before Three Way Catalytic Converter (TWC) ⇒ Page 24-71
- Check oxygen sensor aging of oxygen sensor before catalytic converter ⇒ Page 24-84
- Check oxygen sensor heater for Oxygen Sensor (O2S) before Three Way Catalytic Converter (TWC) ⇒ Page 24-89
- Removing and installing ⇒ Page 24-112

cardiagn.com

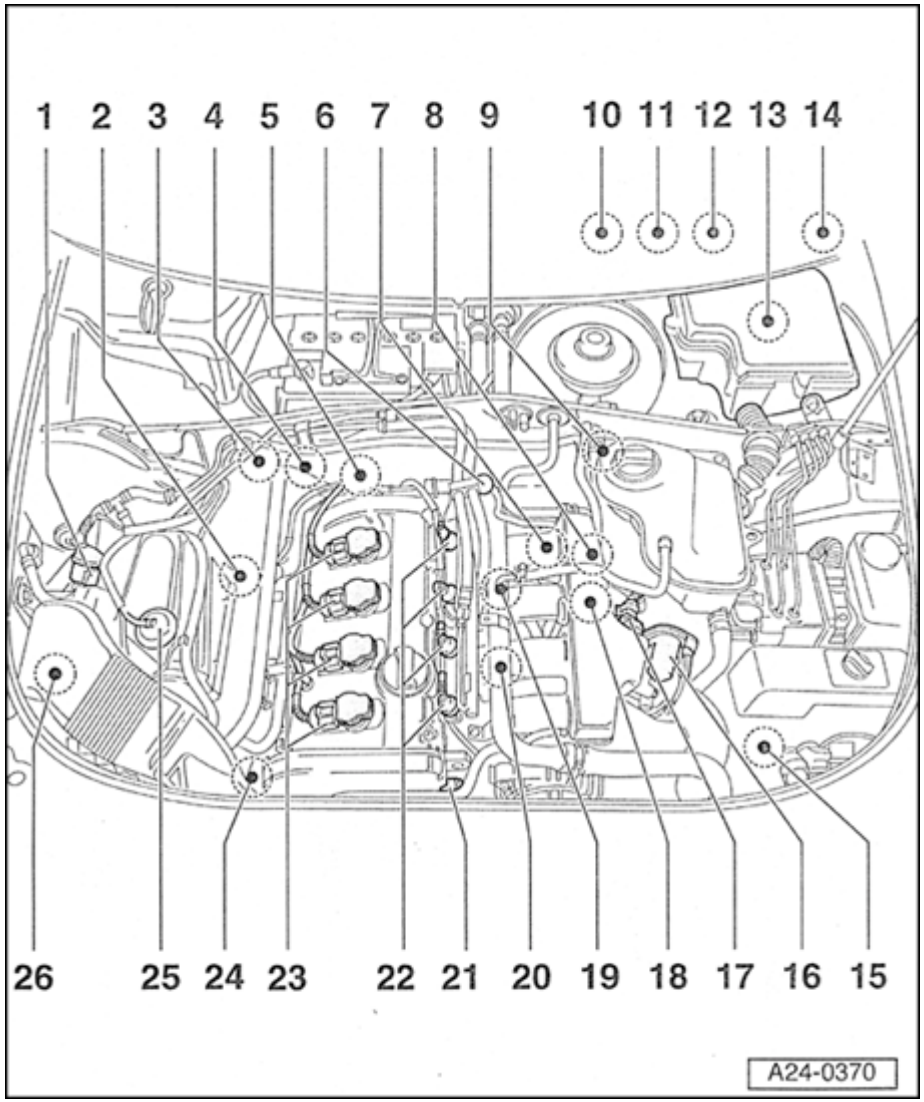

3 - Oxygen Sensor (O2S) behind Three Way Catalytic Converter (TWC) -G130-, 55 Nm

- Check Oxygen Sensor (O2S) and oxygen sensor control behind Three Way Catalytic Converter (TWC) ⇒ Page 24-94
- Check oxygen sensor heater for Oxygen Sensor (O2S) behind Three Way Catalytic Converter (TWC) ⇒ Page 24-107
- Removing and installing ⇒ Page 24-112

4 - Combination valve for secondary air injection (AIR)

- Checking, removing and installing:

⇒ *Repair Manual, 1.8 Liter 4-Cyl. 5V Turbo Engine Mechanical, Engine Code(s): AWM, Engine Code (s): AWM, Repair Group 26; Secondary Air Injection (AIR) system, checking*

5 - Engine Coolant Temperature (ECT) sensor -G62-

- Checking ⇒ Page 28-31

cardiagn.com

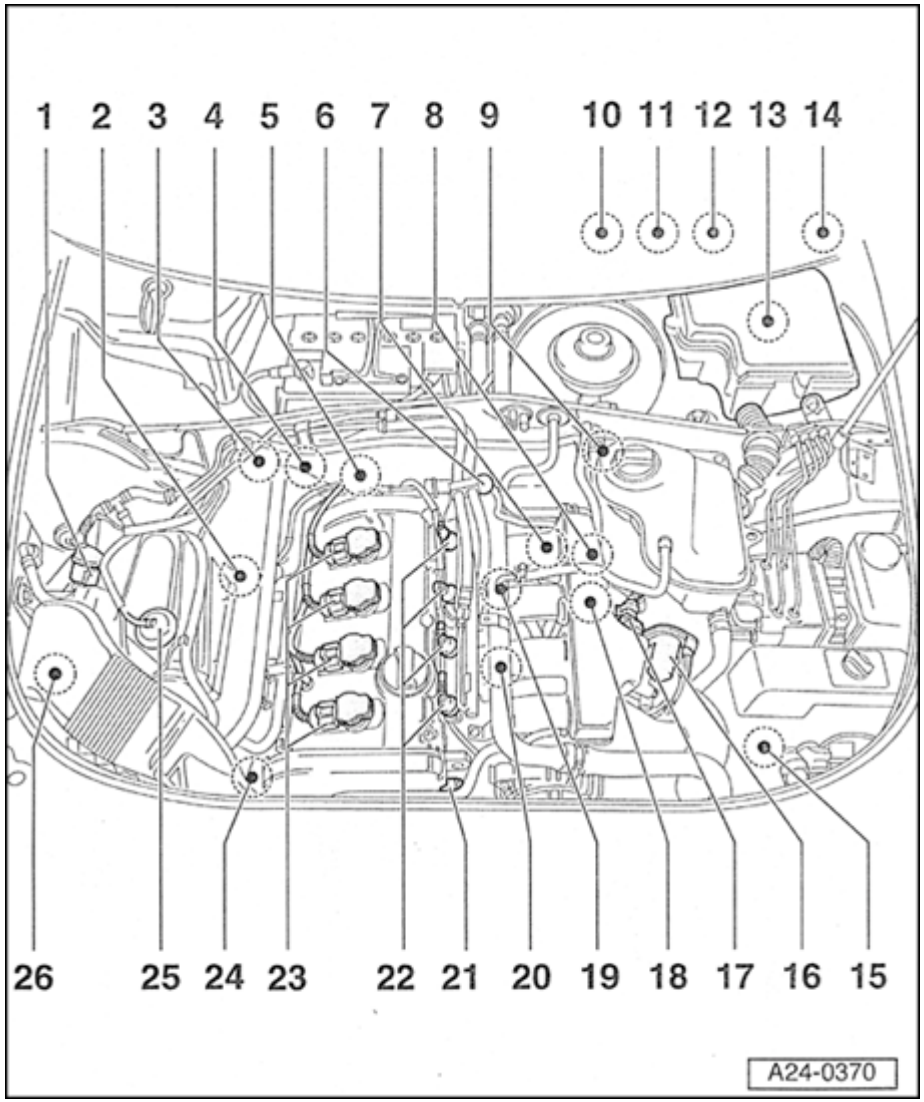

6 - Fuel pressure regulator

- Checking ⇒ Page 24-32

7 - Engine Speed (RPM) sensor -G28-

- Checking ⇒ Page 28-27

8 - Secondary Air Injection (AIR) solenoid valve-N112-

- Installation location ⇒ Fig. ⇒ 4 , ⇒ Page 24-14
- Checking:

⇒ *Repair Manual, 1.8 Liter 4-Cyl. 5V Turbo Engine Mechanical, Engine Code(s): AWM, Repair Group 26; Secondary Air Injection (AIR) system, checking*

- Green harness connector

9 - Bracket for harness connectors

- Component location ⇒ Fig. ⇒ 1 , ⇒ Page 24-13
- Accessible with coolant expansion tank unbolted and swung to the side.

cardiagn.com

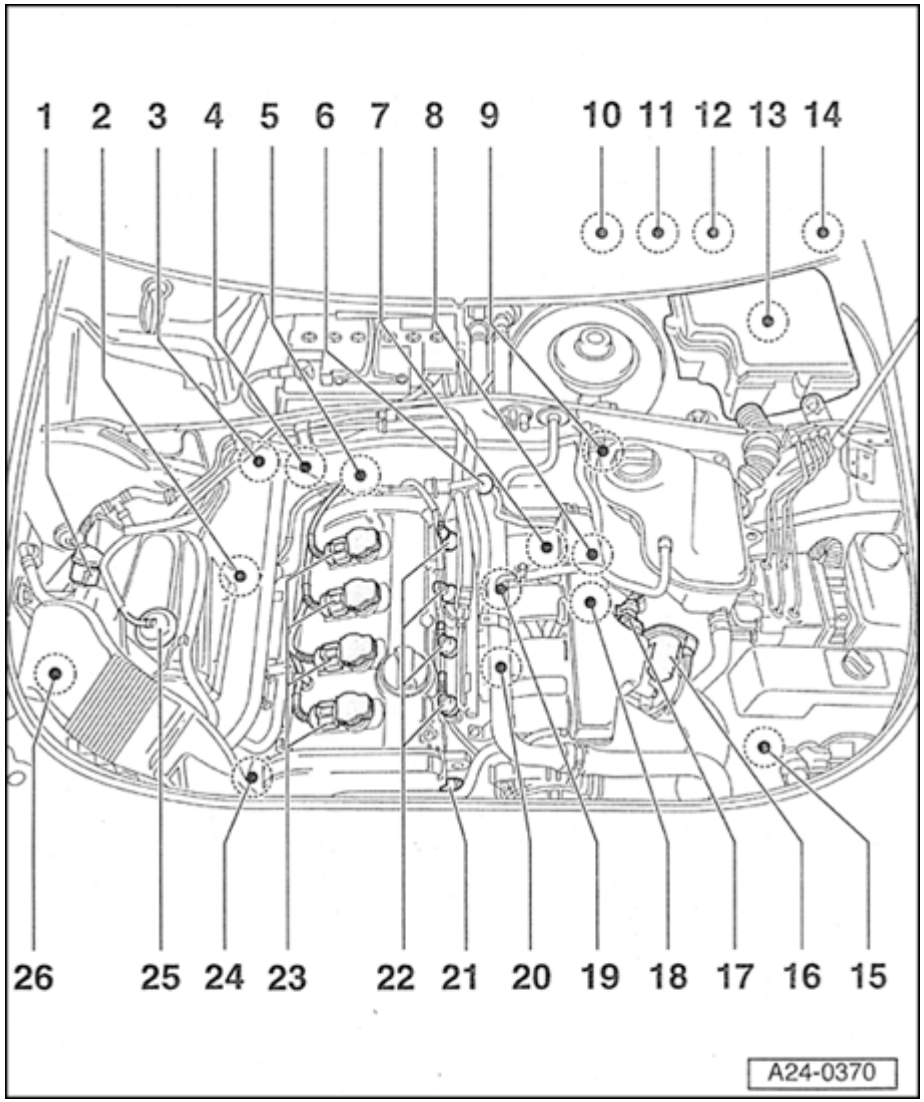

10 - Instrument cluster

- with exhaust Malfunction Indicator Lamp (MIL). Notes for Malfunction Indicator Lamp (MIL) ⇒ Page 01-3
- with Electronic Power Control (EPC) warning lamp -K132- (EPC warning lamp). Significance of EPC warning lamp ⇒ Page 24-122

11 - Throttle Position (TP) sensor -G79- and sender 2 for accelerator pedal position -G185-

- Component location ⇒ Fig. ⇒ 5 , ⇒ Page 24-15
- Checking ⇒ Page 24-138
- Adapt kick down function ⇒ Page 24-145

12 - Brake light switch -F- and brake pedal switch -F47-

- Component location ⇒ Fig. ⇒ 3 , ⇒ Page 24-14

cardiagn.com

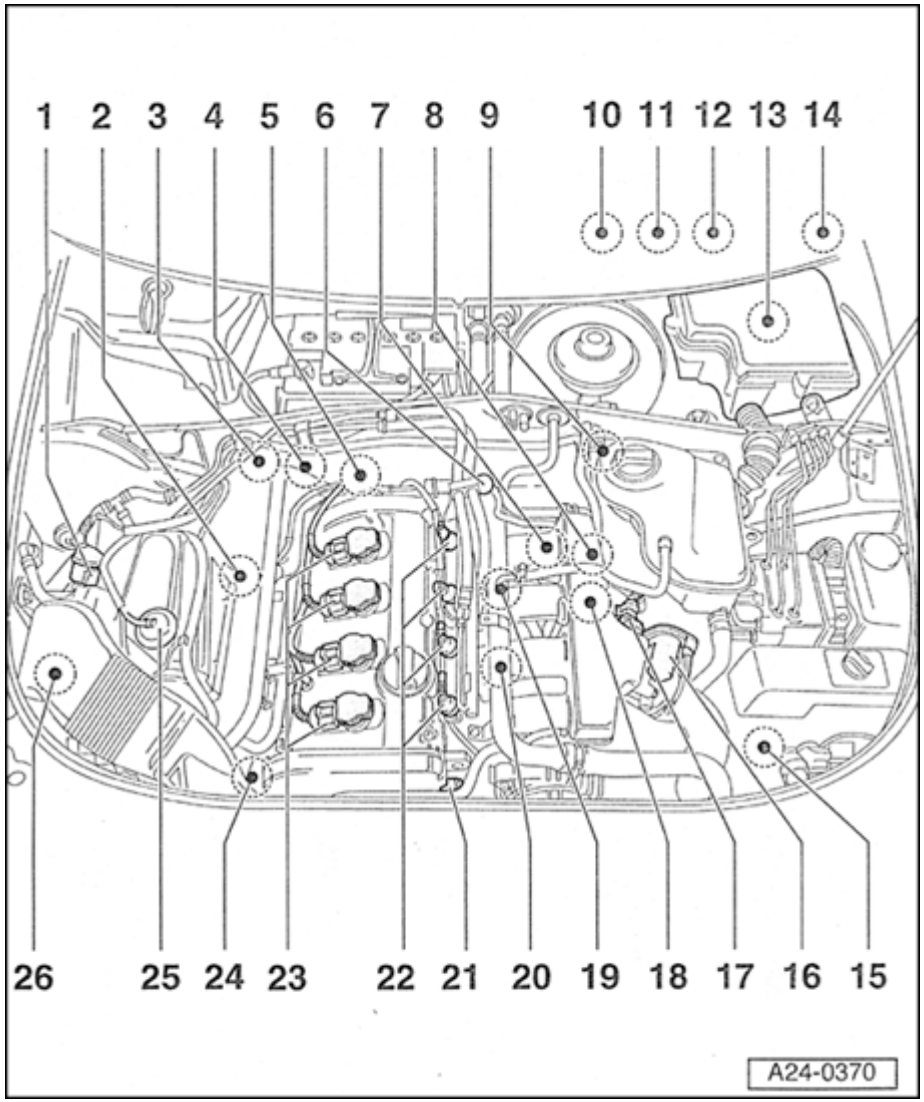

13 - E-box, plenum chamber

- Installation locations ⇒ Fig. ⇒ 6 , ⇒ Page 24-15
- Installation location for motronic Engine Control Module (ECM) -J220- with integrated Barometric pressure (BARO) sensor -F96-
- Check voltage supply of Engine Control Module (ECM) ⇒ Page 28-37
- Procedure to follow after open circuit in voltage supply ⇒ Page 24-21
- Replacing Engine Control Module (ECM) ⇒ Page 24-22
- Installation location of Secondary Air Injection (AIR) pump relay -J299-
- Check Secondary Air Injection (AIR) pump relay -J299-:

⇒ *Repair Manual, 1.8 Liter 4-Cyl. 5V Turbo Engine Mechanical, Engine Code(s): AWM, Repair Group 26; Secondary Air Injection (AIR) system, checking*

- Installation location of motronic Engine Control Module (ECM) voltage supply relay -J271-
- Check motronic Engine Control Module

cardiagn.com

(ECM) voltage supply relay -J271- ⇒ Page 28-13

- Installation location of fuse S130 for Secondary Air Injection (AIR) pump

cardiagn.com

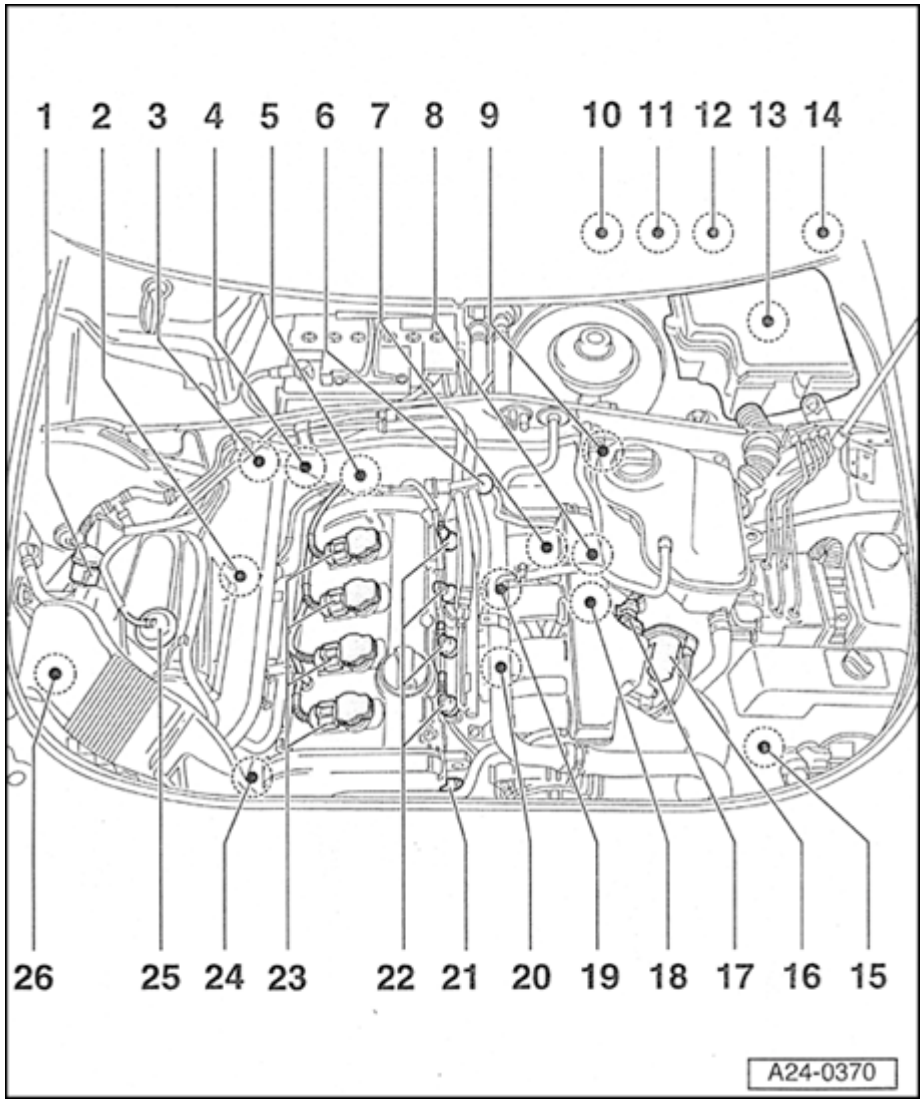

14 - Clutch vacuum vent valve switch -F36-

- Component location ⇒ Fig. ⇒ 3 , ⇒ Page 24-14

15 - Charge air pressure sensor -G31-

- Installation location ⇒ Fig. ⇒ 7 , ⇒ Page 24-16
- Checking:

⇒ *Repair Manual, 1.8 Liter 4-Cyl. 5V Turbo Engine Mechanical, Engine Code(s): AWM, Repair Group 21, Charge air system with turbocharger, checking*

16 - Throttle valve control module -J338-

- With throttle drive (power accelerator actuation) -G186-, angle sensor -1- for throttle drive (power accelerator actuation) -G187-, and angle sensor -2- for throttle drive (power accelerator actuation) -G188-
- Checking ⇒ Page 24-124

cardiagn.com

24-11

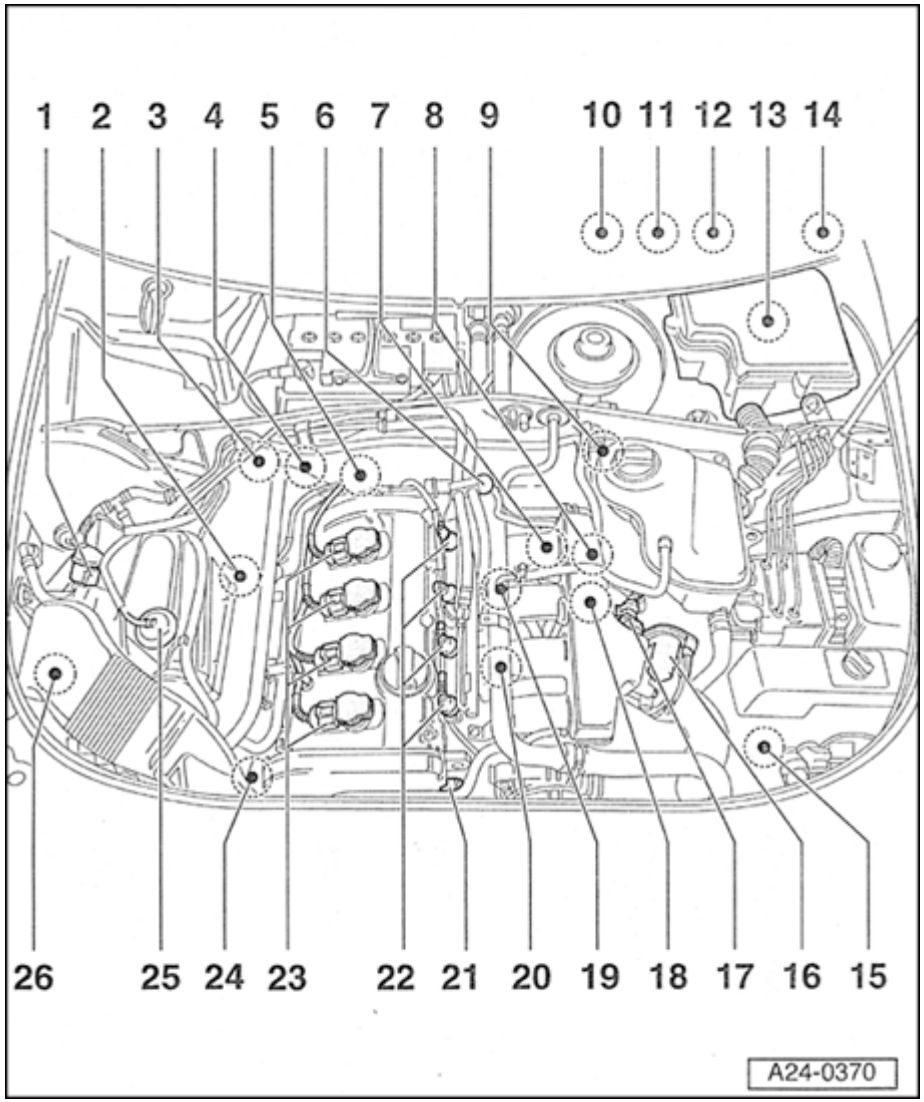

17 - Intake Air Temperature (IAT) sensor -G42-

- Checking ⇒ Page 28-21

18 - Recirculating valve for turbocharger- N249-

- Installation location ⇒ Fig. ⇒ 4 , ⇒ Page 24-14
- Blue harness connector

19 - Knock Sensor (KS) 1 -G61-

20 - Knock Sensor (KS) 2 -G66-

21 - Camshaft Position (CMP) sensor 2 -G40-

- Checking ⇒ Page 28-49

22 - Fuel injector

- Cylinder 1 Fuel Injector -N30-
- Cylinder 2 fuel injector -N31-
- Cylinder 3 fuel injector -N32-
- Cylinder 4 fuel injector -N33-
- Checking ⇒ Page 24-37
- Removing and installing ⇒ Page 24-45

cardiagn.com

24-12

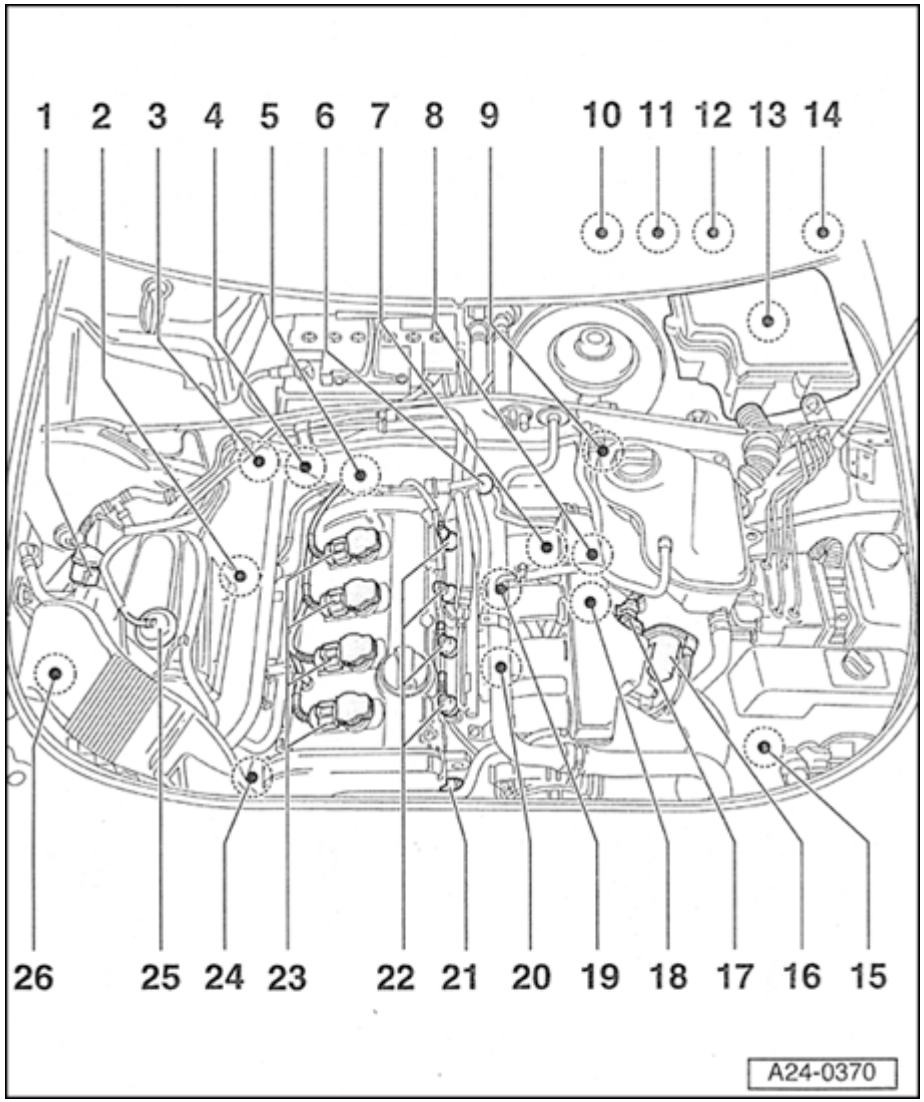

23 - Ignition coil

- Ignition coil -N-
- Ignition coil 2 -N128-
- Ignition coil 3 -N158-
- Ignition coil 4 -N163-
- Checking ⇒ Page 28-4

24 - Wastegate bypass regulator valve -N75-

- Checking:

⇒ *Repair Manual, 1.8 Liter 4-Cyl. 5V Turbo Engine Mechanical, Engine Code(s): AWM, Repair Group 21, Charge air system with turbocharger, checking*

25 - Mass Air Flow (MAF) sensor -G70-

- Checking ⇒ Page 24-59

26 - Secondary Air Injection (AIR) pump motor-V101-

- Checking:

⇒ *Repair Manual, 1.8 Liter 4-Cyl. 5V Turbo Engine Mechanical, Engine Code(s): AWM, Repair Group 26; Secondary Air Injection (AIR) system, checking*

cardiagn.com

24-13

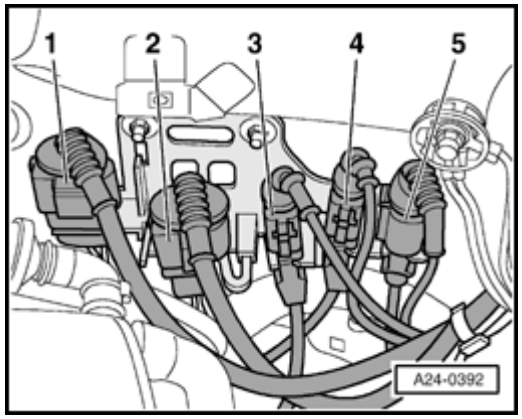

Fig. 1 Installation location, harness connectors

The following harness connectors are located below the coolant expansion tank:

1 - 4-pin harness connector, brown

for Oxygen Sensor (O2S) behind Three Way Catalytic Converter (TWC) -G130- and Oxygen Sensor (O2S) Heater 1 -Z29- (bank 1 sensor 2)

2 - 6-pin harness connector, black

for Heated Oxygen Sensor (HO2S) -G39- beforecatalytic converter and Oxygen Sensor (O2S) Heater -Z19- (bank 1 sensor 1)

3 - 3-pin harness connector, gray

for Engine Speed (RPM) sensor -G28-

4 - 3-pin harness connector, blue

for Knock Sensor (KS) 2 -G66-

5 - 3-pin harness connector, green

for Knock Sensor (KS) 1 -G61-

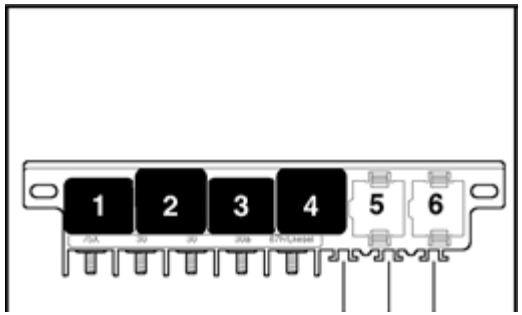

Fig. 2 Component locations Fuel Pump (FP) Relay -J17-

Fuel Pump (FP) Relay -J17- is located at position 4 of central electronics in driver's footwell, left.

cardiagn.com

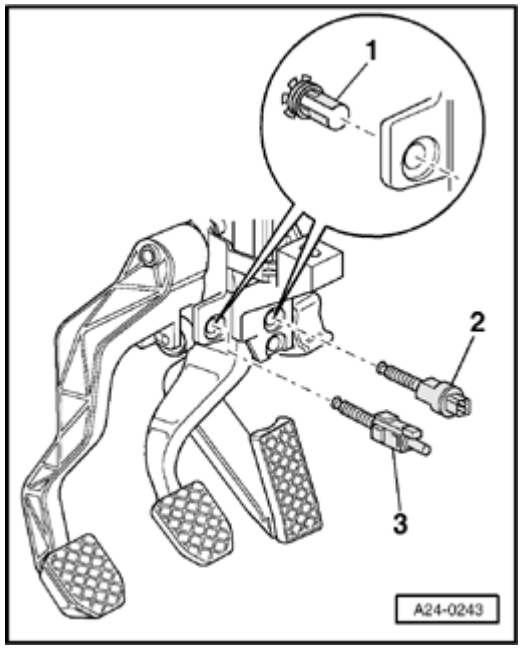

Fig. 3 Installation location of brake light switch -F- and brake pedal switch -F47-, clutch vacuum vent valve switch -F36-

1 - Clip

2 - Clutch vacuum vent valve switch -F36-

3 - Brake light switch -F-, brake pedal switch -F47-

Note:

In order to assure sufficiently secure fitting, switches must not be installed more than once.

Adjusting switch:

⇒ *Repair Manual, Brake System, Repair Group 46; Brake booster, removing and installing*

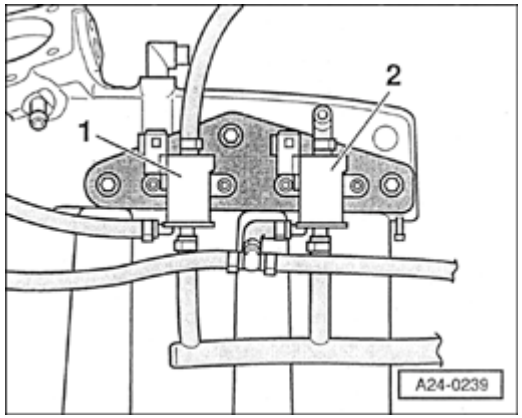

Fig. 4 Installation location of Secondary Air Injection (AIR) solenoid valve-N112- and recirculating valve for turbocharger-N249-

- Installation location: Below intake manifold

1 - Recirculating valve for turbocharger -N249-

2 - Secondary Air Injection (AIR) solenoid valve -N112-

Note:

Illustration depicts intake manifold removed, from below.

cardiagn.com

24-15

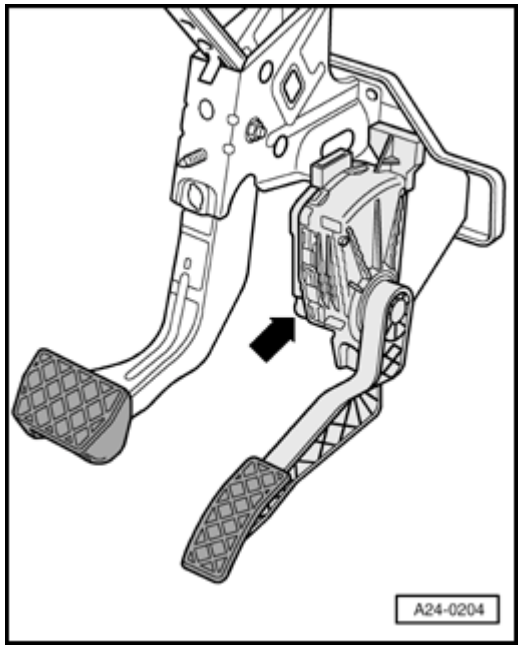

Fig. 5 Installation position, Throttle Position (TP) sensor -G79- and sender 2 for accelerator pedal position -G185-

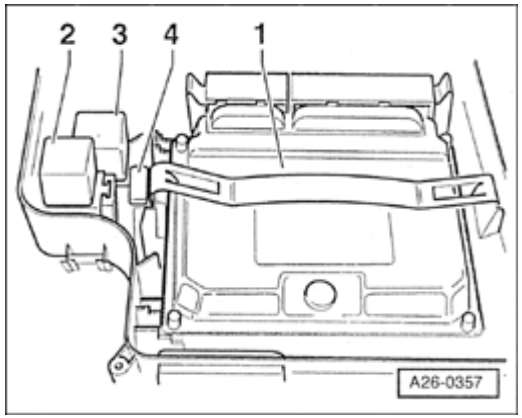

Fig. 6 Installation positions in E-box, plenum chamber

1 - Engine Control Module (ECM)

2 - Secondary Air Injection (AIR) pump relay -J299-

3 - Motronic Engine Control Module (ECM) voltage supply relay -J271-

4 - Installation location of fuse S130 for Secondary Air Injection (AIR) pump

cardiagn.com

24-16

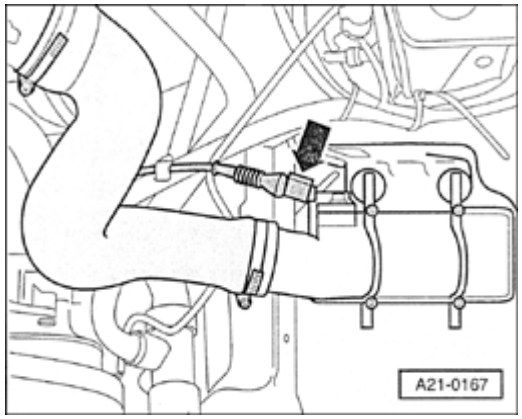

Fig. 7 Installation location, charge air pressure sensor -G31-

Charge air pressure sensor -G31- (arrow) bolted into charge air cooler at top

cardiagn.com

24-17

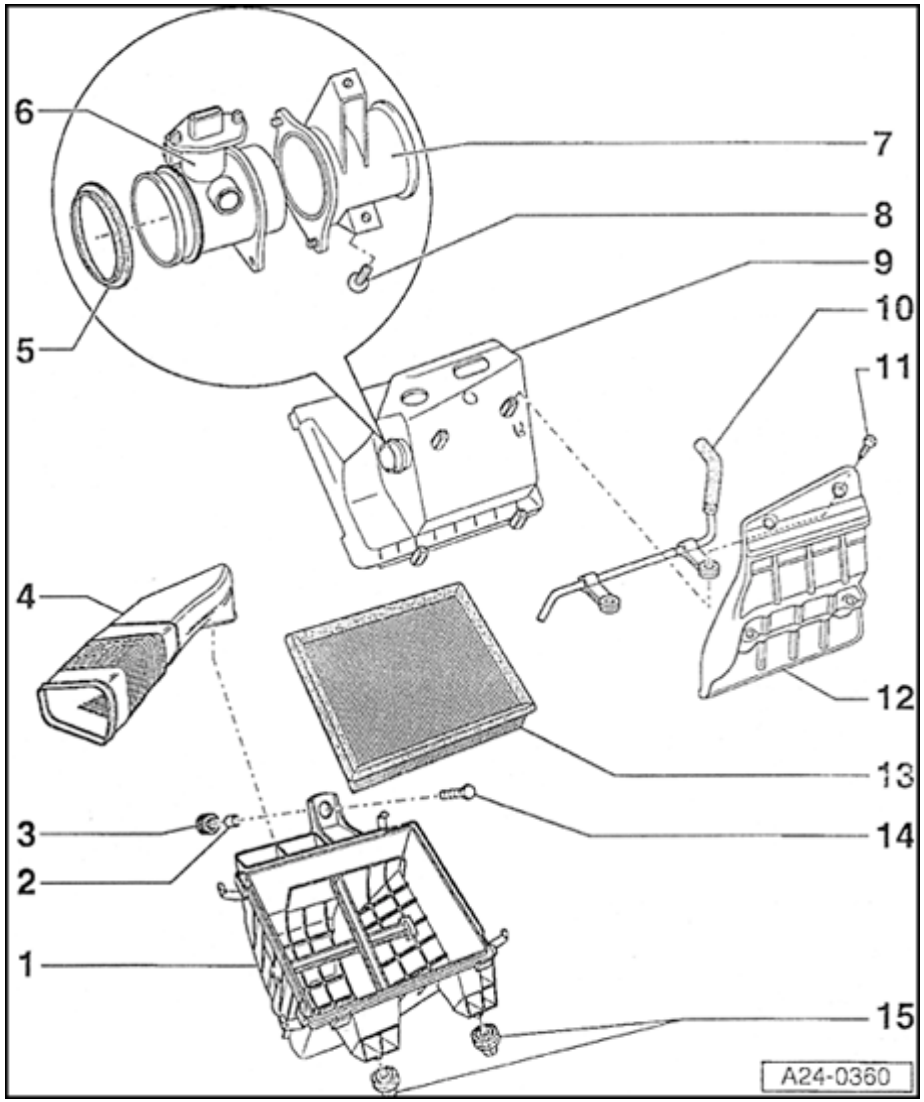

Air cleaner, disassembling and assembling

1 - Lower part of air cleaner housing

2 - Sleeve

3 - Rubber grommet

4 - Air duct

- to metering unit

5 - Seal

6 - Mass Air Flow (MAF) sensor -G70-

- Checking ⇒ Page 24-59

7 - Air duct

8 - 6 Nm

9 - Upper part of air cleaner housing

cardiagn.com

24-18

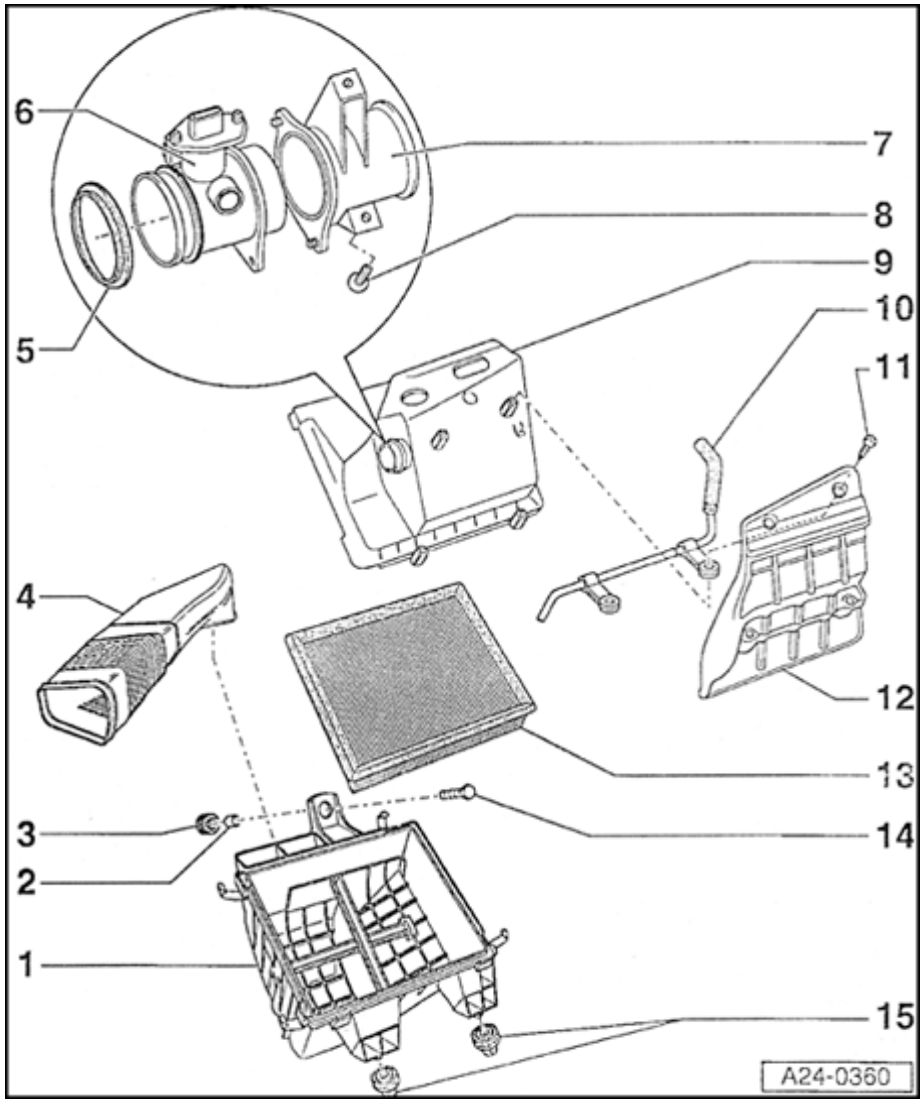

10 - Wire

- For EVAP canister system

11 - 10 Nm

12 - Heat shield

13 - Filter element

- Follow filter change intervals

⇒ *Repair Manual, Maintenance*

14 - 10 Nm

15 - Rubber grommet

cardiagn.com

24-19

Wire and component testing using VAG1598/31 test box

Notes:

- *VAG1598/31 test box is designed so that it can be simultaneously connected to the wiring harness at the Engine Control Module (ECM) and also to the ECM itself.*
- *This is advantageous because electronic engine control remains fully functional (e.g. measurement of signals with engine running) when the test box is attached.*
- *Relevant test procedures note whether Engine Control Module (ECM) should also be connected to the test box or not.*
- *Always use VAG1594A connector test kit to attach measurement devices (e.g. VAG1527B voltage tester, VAG1526 multimeter etc.).*

WARNING!

To avoid damaging electronic components, set measuring range before connecting test leads and observe all test requirements.

cardiagn.com

24-20

Special Tools and Equipment

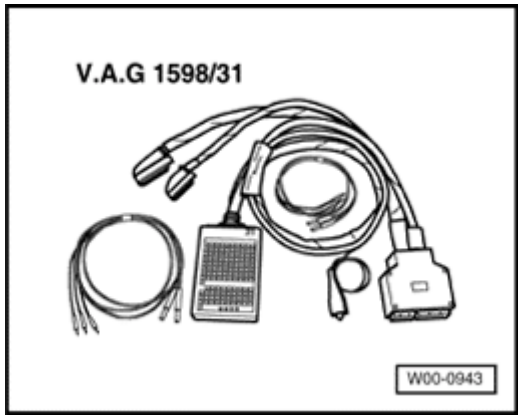

- VAG1598/31

Procedure

- Switch ignition off.
- Remove Engine Control Module (ECM) ⇒ Page 24-22 .

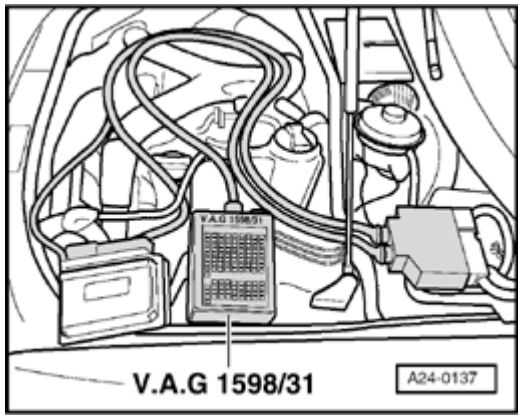

- Connect VAG1598/31 test box to connector of wiring harness. Connect Ground (GND) clip at test box (not visible in illustration) to Ground (GND). Relevant test procedures note whether Engine Control Module (ECM) should also be connected to the test box.
- Perform test as described in relevant repair sequence.

After re-connecting the Engine Control Module (ECM), the following work steps must be performed:

- Activate Engine Control Module (ECM) in "Guided Troubleshooting" below diagnostic object "Engine Control Module (ECM), replacing".

cardiagn.com

24-21

Procedure following interruption of voltage supply

After re-connecting voltage supply, the following work steps must be performed:

- Activate Engine Control Module (ECM) in "Guided Troubleshooting" below diagnostic object "Engine Control Module (ECM), replacing".

cardiagn.com

24-22

Engine Control Module (ECM), replacing

Special Tools and Equipment

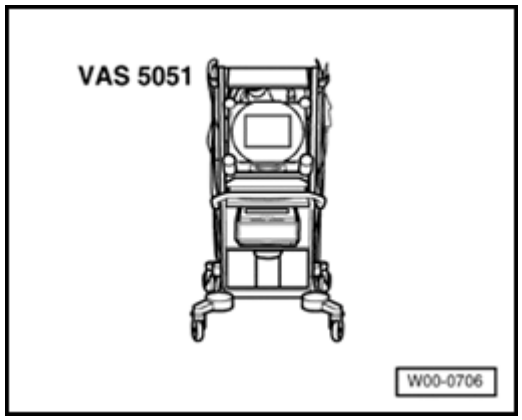

- VAS5051 with VAG5051/1

Removing

- Connect VAS5051 tester ⇒ Page 01-7 and select vehicle system "01 - Engine electronics". Ignition must remain switched on for this.

VAS5051 tester display will indicate the control module identification and coding -2-.

- Always allow display of control module identification first and print it out.
- Compare coding with coding versions ⇒ Page 01-73 .

cardiagn.com

24-23

- Switch ignition off.

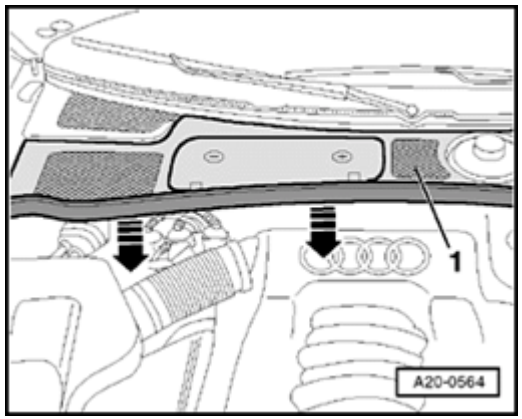

- Pull off rubber seal of plenum chamber cover in direction of arrow.
- Remove cover -1- toward front.

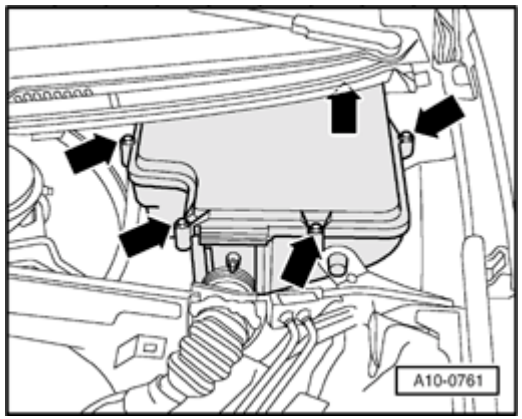

- Remove Heater Core E-box cover (arrows).

cardiagn.com

24-24

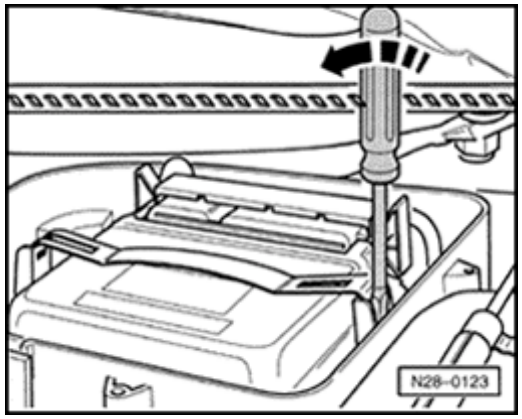

- Using a screwdriver, carefully pry off retaining bracket (arrow).

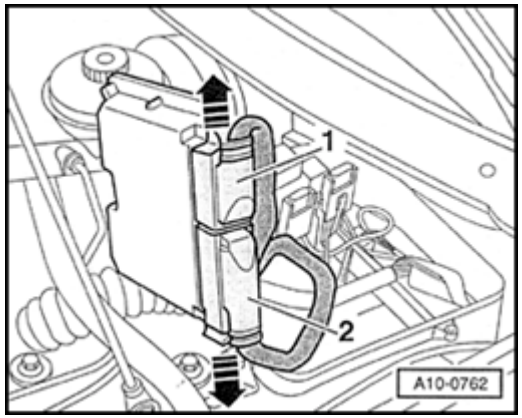

- Disengage connector catches (arrows) and disconnect harness connectors -1- and -2- from control module.

Note:

Adaptation values are erased when connector is disconnected from the Engine Control Module (ECM), DTC memory content remains intact.

- Remove Engine Control Module (ECM).

cardiagn.com

24-25

Installing

Installation is reverse of removal, noting the following:

After connecting new Engine Control Module (ECM), the following work steps must be performed:

- Activate Engine Control Module (ECM) in "Guided Troubleshooting" below diagnostic object "Engine Control Module (ECM), replacing".

cardiagn.com

24-26

Idle speed (RPM), checking

Special Tools and Equipment

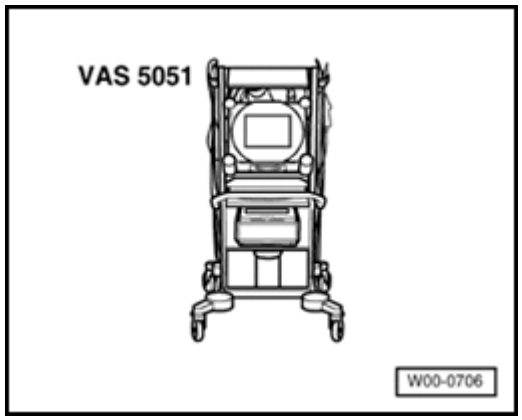

- VAS5051 with VAG5051/1

Test requirements:

- Exhaus system free of leaks.
- Coolant Temperature at least 80 °C.
- Electrical consumers switched off (radiator fan must NOT run during test).
- A/C switched off.
- No pressure gauge connected.
- Vehicles with automatic transmission Selector lever in P or N.

cardiagn.com

24-27

Notes:

- *Idle speed cannot be adjusted.*
- *Idle speed is checked during basic setting of the engine.*
- *During basic setting, the Evaporative Emission (EVAP) canister purge regulator valve (EVAP valve -N80-) is closed and the A/C compressor is switched off*

Test sequence

- Check DTC memory ⇒ Page 01-12 . There must not be any DTCs stored, repair malfunctions if necessary, erase DTC memory, switch engine off and start again, road test vehicle and check DTC memory again as a control measure.

- Let engine continue to run at idle.

WARNING!

The electric fan for the radiator must not be running.

cardiagn.com

24-28

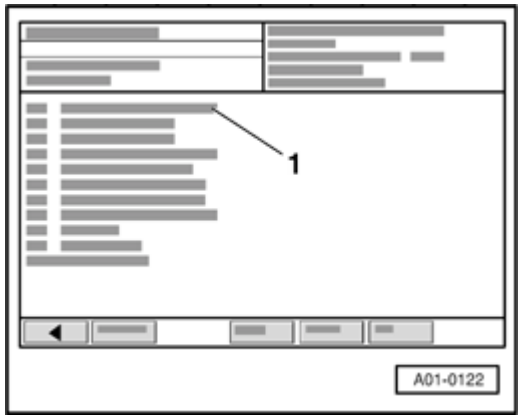

Display on VAS5051:

- In selection -1-, click on the diagnostic function "04 - Basic setting".

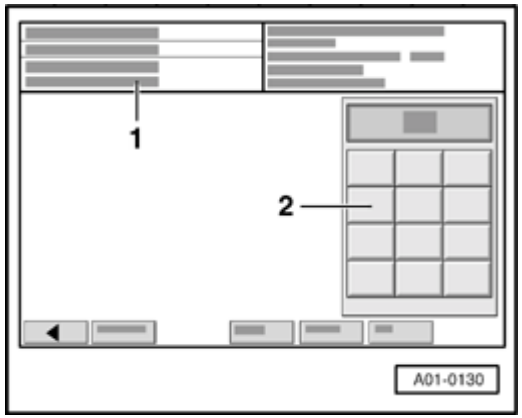

Display on VAS5051:

1 - Enter display group Max. input value = 255

- Select function "056" in button field -2- for "display group number 056" and press Q button to confirm input.

cardiagn.com

24-29

Display on VAS5051:

- Check whether the engine speed in display field -1 (actual engine speed) is within the permissible specified range.

	Display fields			
	1	2	3	4
Display group 056: Idle stabilization at operating temperature				
Display	**xxx /min**	**xxx /min**	x.x %	X X X X X
Indicated	**Engine speed (actual)**	**Engine speed (specified)**	Idle control Torque change	Operating conditions
Specified value	**FWD: 740 to 860 RPM** **AWD: 760 to 880 RPM**	**FWD: 800 RPM** **AWD: 820 RPM**	x.x %	0 0 0 0 0
Note	**If specified value is not obtained** ⇒ **Page 24-31**			Significance of numbers ⇒ Page 24-31

cardiagn.com

24-30

Notes:

- *Engine speed in display field 1 (actual engine speed) is the current engine speed.*
- *Engine speed in display field 2 (specified engine speed) is a theoretical engine speed calculated by the ECM.*
- *At idle, the ECM always attempts to adapt the engine speed (actual) to the specified engine speed (specified).*
- *This means that the engine speed (actual) must always approximately match the engine speed (specified) at idle.*
- *Display fields 3 and 4 provide information, but are not relevant for checking idle speed.*

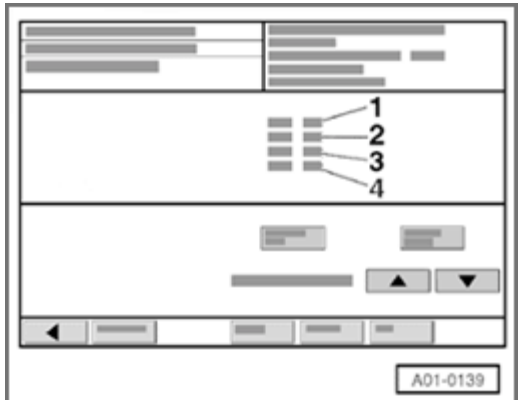

Display on VAS5051:

If specified value is obtained:

- End function "04 - Basic setting" by pressing button.

If specified value is not obtained:

- Check DTC memory again ⇒ Page 01-12 .

cardiagn.com

- If DTC memory was erased, readiness code must be re-generated ⇒ Page 01-84 .

cardiagn.com

24-31

If idle speed is too high or low and there are no DTCs in DTC memory, the following tests (marked with dots) must be performed:

- Check for false air in intake air system ⇒ Page 24-68 .
- Check throttle valve control module ⇒ Page 24-124 .
- Evaporative Emission (EVAP) canister purge regulator valve always open, checking ⇒ Page 24-114 .
- Perform adaptation of throttle valve control module ⇒ Page 24-125 .

Significance of 5 digit indication of display group 056

x	x	x	x	x	Display field 4
				0	A/C compressor: 0 = A/C compressor off; 1 = A/C compressor on
			0		Manual transmission: Indication always 0 Driving mode for automatic transmission: 0 = selector lever in P or N; 1 = selector lever in 2/3/4/D/R
		0			Indication always 0
	0				Indication always 0
0					Indication always 0

cardiagn.com

24-32

System pressure, fuel pressure regulator and residual pressure, checking

Note:

Fuel pressure regulator regulates fuel pressure according to intake manifold pressure. This ensures that the pressure drop at the fuel injectors remains the same for each speed and load range of the engine.

Special Tools and Equipment

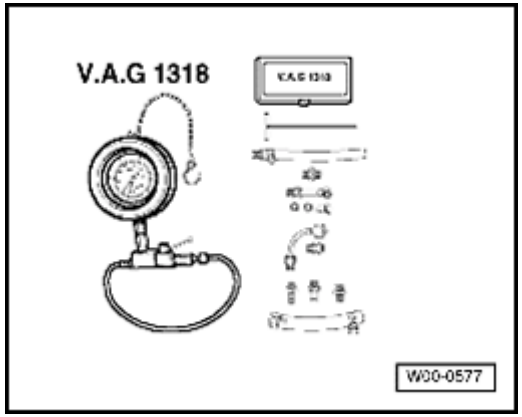

- VAG1318
- V.A.G 1318 with V.A.G 1318/11 adapter, V.A.G 1318/12 pressure hose with connectors and V.A.G 1318/13 adapter

Test requirements:

- Fuel Pump (FP) relay OK; checking ⇒ Page 24-52 .
- Fuel Pump (FP) OK, checking:

⇒ *Repair Manual, Fuel Supply System, Repair Group 20*

- Fuel filter OK
- Battery voltage at least 12.7 V
- Vehicles with automatic transmission Selector lever in P or N.

cardiagn.com

24-33

Checking system pressure

- Open fuel filler flap briefly (pressure release).

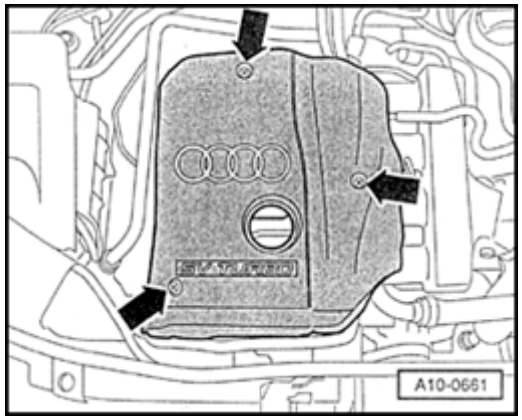

- Remove engine cover (arrows).

WARNING!

Fuel system is under pressure! Before opening system, place rags around the connection point. Then release pressure by carefully loosening connection.

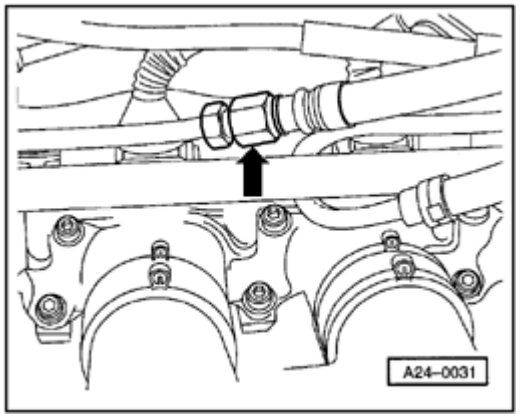

- Open threaded connection (arrow) and catch exiting fuel using a rag.
- Connect VAG1318 pressure gauge in supply line using adapters 1318/11, 1318/12 and 1318/13.

cardiagn.com

24-34

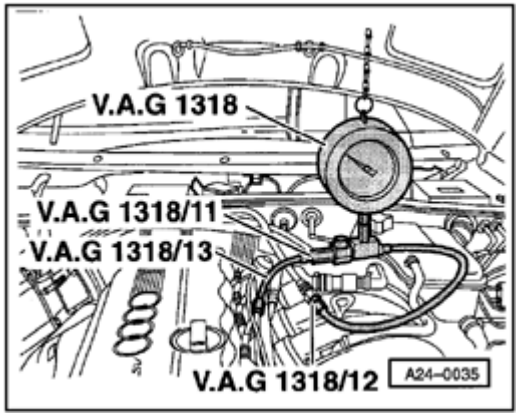

- Open shut-off valve of pressure gauge. The lever points in the direction of flow.
- Start engine and let run at idle.
- Measure fuel pressure.
  - ♦ Specification: about 3.5 bar positive pressure

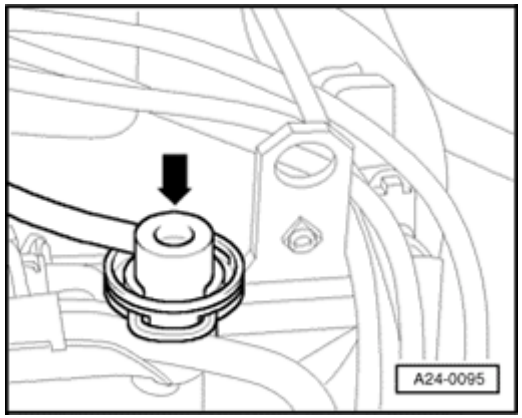

- Disconnect vacuum hose at fuel pressure regulator.
  - ♦ Fuel pressure must rise to about 4.0 bar positive pressure.
- Switch ignition off.
- Check for proper seal and residual pressure by observing pressure drop on pressure gauge.
  - ♦ After 10 minutes, there must be at least 2.5 bar positive pressure

cardiagn.com

24-35

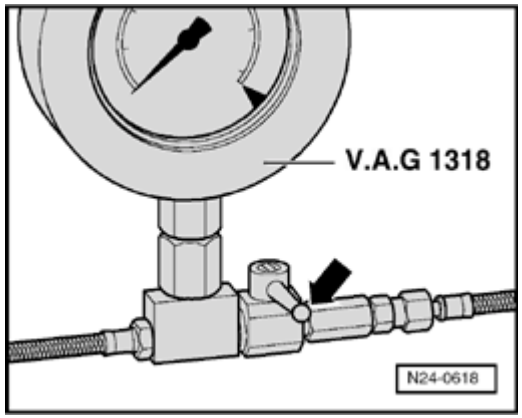

If residual pressure sinks below 2.5 bar positive pressure:

- Start engine and let run at idle.

- Wait until pressure has dropped, and then switch off ignition. Simultaneously close shut-off valve of VAG1318 pressure gauge (lever perpendicular to direction of flow -arrow-).
- Observe pressure drop on pressure gauge.

If pressure does not drop now:

- Test check-valve on Fuel Pump (FP).

If pressure drops again:

- Open shut-off valve of pressure gauge. The lever points in the direction of flow.
- Start engine and let run at idle.
- Wait until pressure has dropped, and then switch off ignition. Simultaneously clamp return line (with blue marking) completely closed.

If pressure does not drop now:

- Replace fuel pressure regulator

cardiagn.com

24-36

If pressure drops again:

- Check wire connections, O-rings at fuel distributor and fuel injectors for proper seal.

- Check whether pressure gauge is properly sealed.

Note:

Before disconnecting pressure gauge, release pressure by opening shut-off valve. Hold a container in front of connection for this.

cardiagn.com

24-37

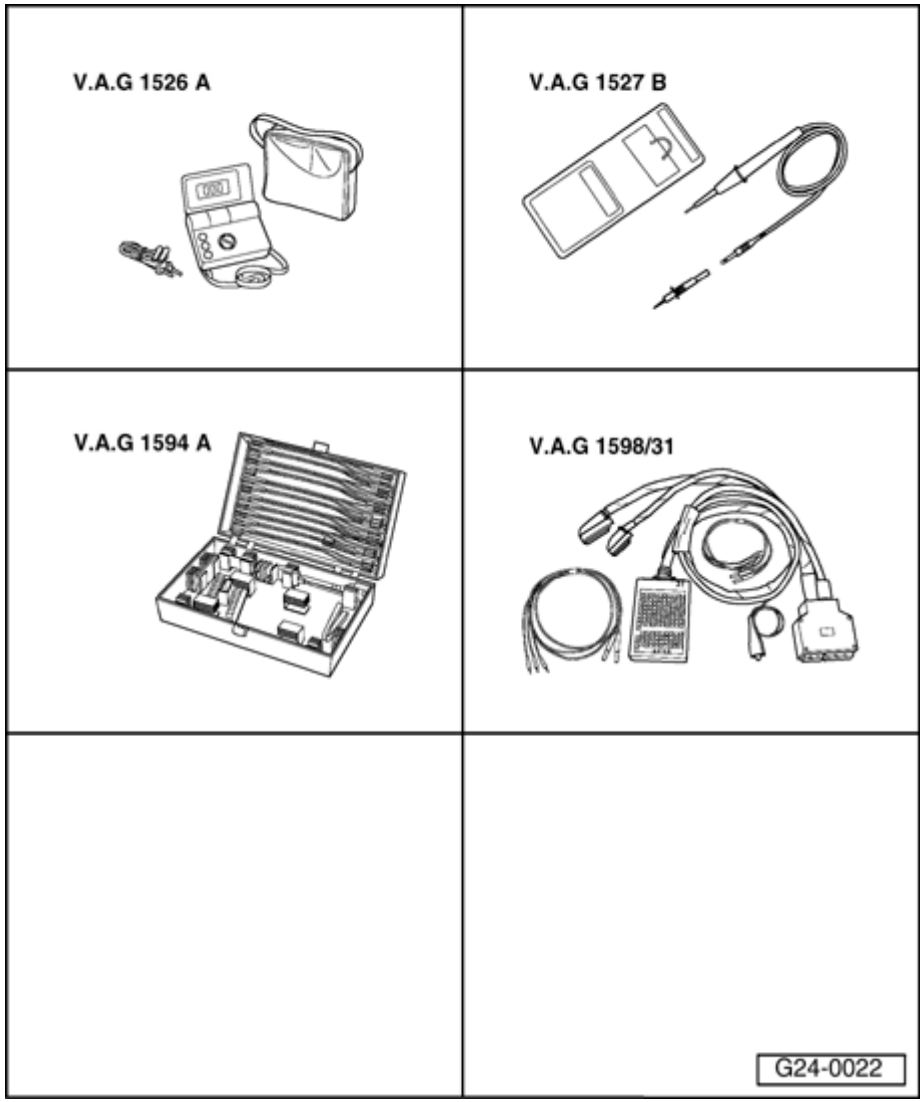

Fuel injectors, checking

Special Tools and Equipment

- VAG1526A
- VAG1527B
- VAG1594A
- VAG1598/31

cardiagn.com

24-38

Checking internal resistance

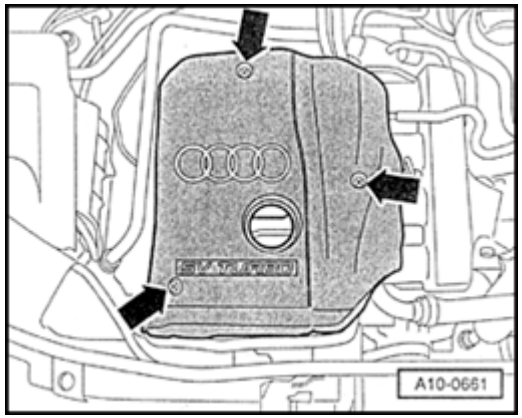

- Remove engine cover (arrows).
- Disconnect connector at the fuel injector to be tested.

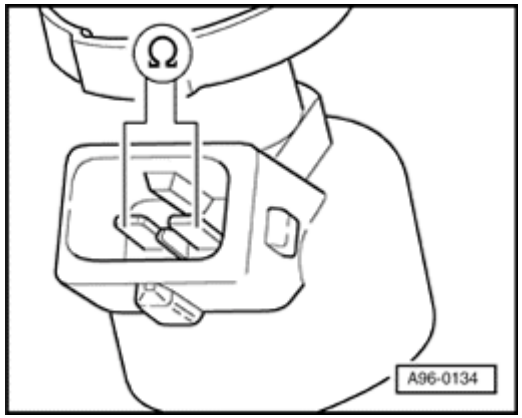

- Connect multimeter at valve for resistance measurement.
  - Specification: 12 to 13 Ω (at room temperature)

If specified value is not obtained:

- Replace fuel injector.

If specified value is obtained:

- Check voltage supply

cardiagn.com

24-39

Checking voltage supply

Test requirements:

- Fuse for fuel injectors OK

⇒ *Electrical Wiring Diagrams, Troubleshooting & Component Locations*

- Fuel Pump (FP) relay OK; checking ⇒ Page 24-52 .

- Disconnect harness connector at the fuel injector to be tested.

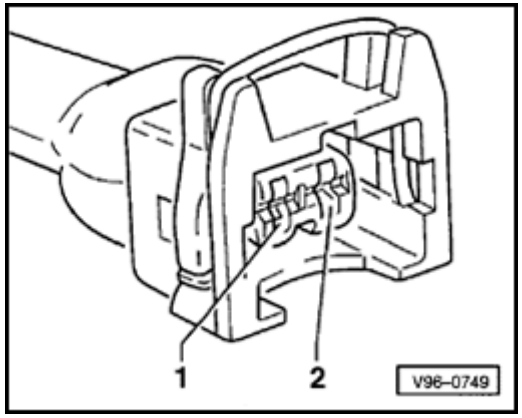

- Connect VAG1527B voltage tester as follows:

Harness connector Terminal	Measure to
1	Engine Ground (GND)

- Switch ignition on.
  - ♦ LED must light up.

If LED does not light up:

cardiagn.com

- Check wire connection between terminal 1 and fuse for injector valves for open circuit:

⇒ *Electrical Wiring Diagrams, Troubleshooting & Component Locations*

cardiagn.com

24-40

- Repair open circuit if necessary.

If LED lights up:

- Activation of fuel injectors, checking

Checking activation

Test requirement:

- Internal resistance of valve OK

- Slide back rubber grommet of fuel injector connector, but leave connector connected.

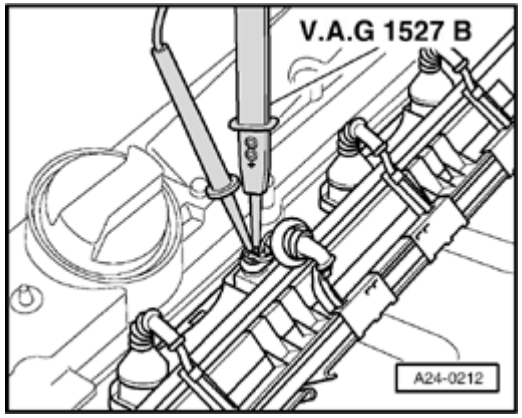

- Connect VAG1527B voltage tester between sockets 2 (signal) and 1 (B+).
- Operate starter briefly (engine can also start).
  - ♦ LED must blink.

Note:

Voltage testers do not go out completely during low current pick-up between activations by the ECM, but rather continue to glow a little and then get slightly brighter during activation.

cardiagn.com

24-41

If LED does not blink:

- Connect VAG1598/31 test box at wiring harness to Engine Control Module (ECM), do not connect ECM ⇒ Page 24-19 .

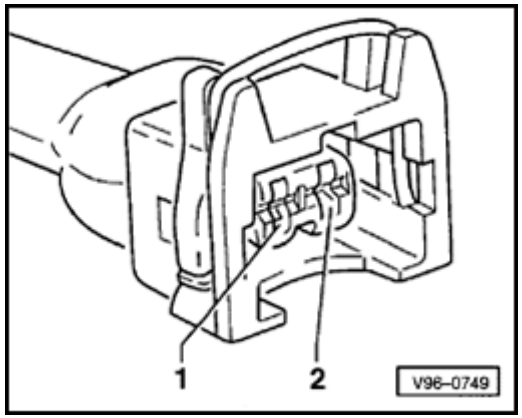

- Check the following wire connections for open circuit and short circuit to Ground (GND) and B+:

Cylinder	Fuel injector harness connector Terminal	VAG1598/31 test box Socket
1	2	96
2	2	89
3	2	97
4	2	88

- Repair open circuit or short circuit if necessary.

If wire connection is OK:

- Replace Engine Control Module (ECM) ⇒ Page 24-22

cardiagn.com

24-42

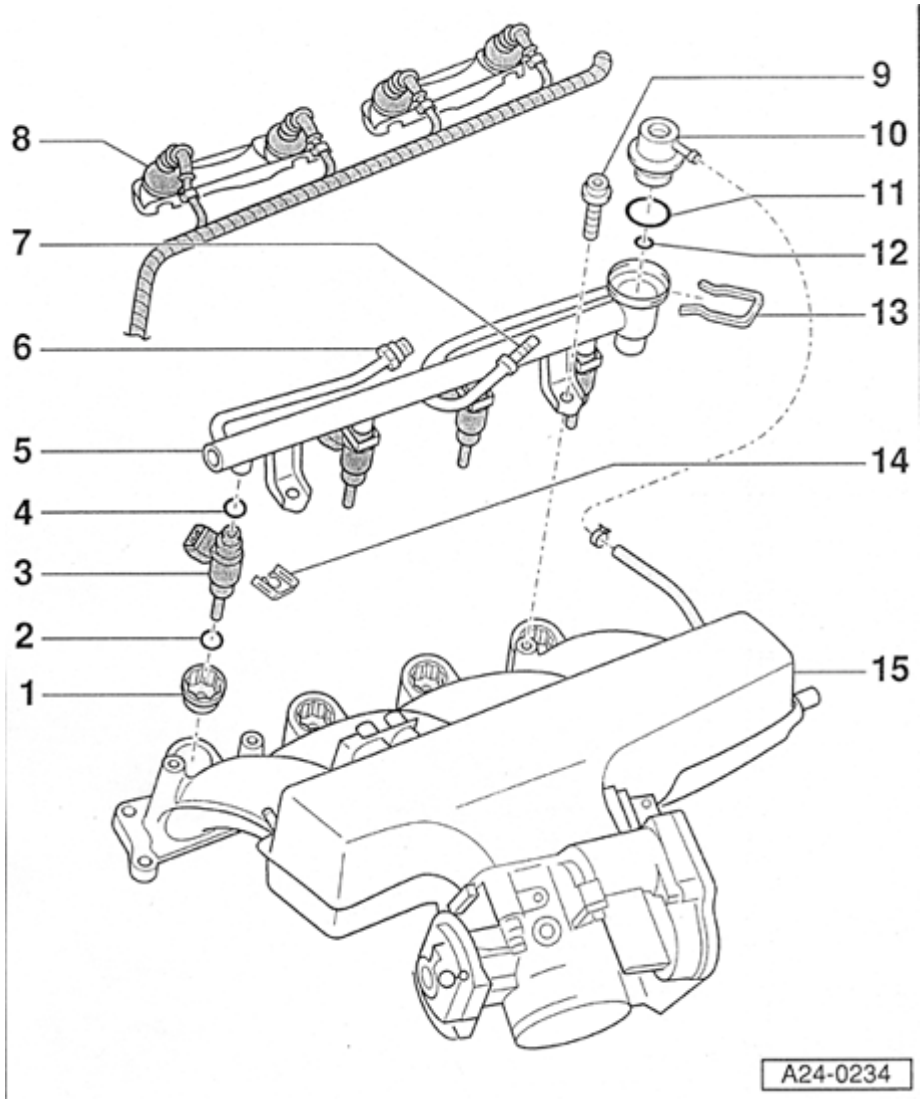

Fuel rail with fuel injectors, disassembling and assembling

1 - Fuel injector insert-3 Nm

- use fluid securing material D 000 600 A2 to insert.

2 - O-ring

- Removing and installing ⇒ Page 24-45
- Always replace
- Coat with clean engine oil

3 - Fuel injector

- Cylinder 1 Fuel Injector -N30-
- Cylinder 2 fuel injector -N31-
- Cylinder 3 fuel injector -N32-
- Cylinder 4 fuel injector -N33-
- Removing and installing ⇒ Page 24-45

cardiagn.com

24-43

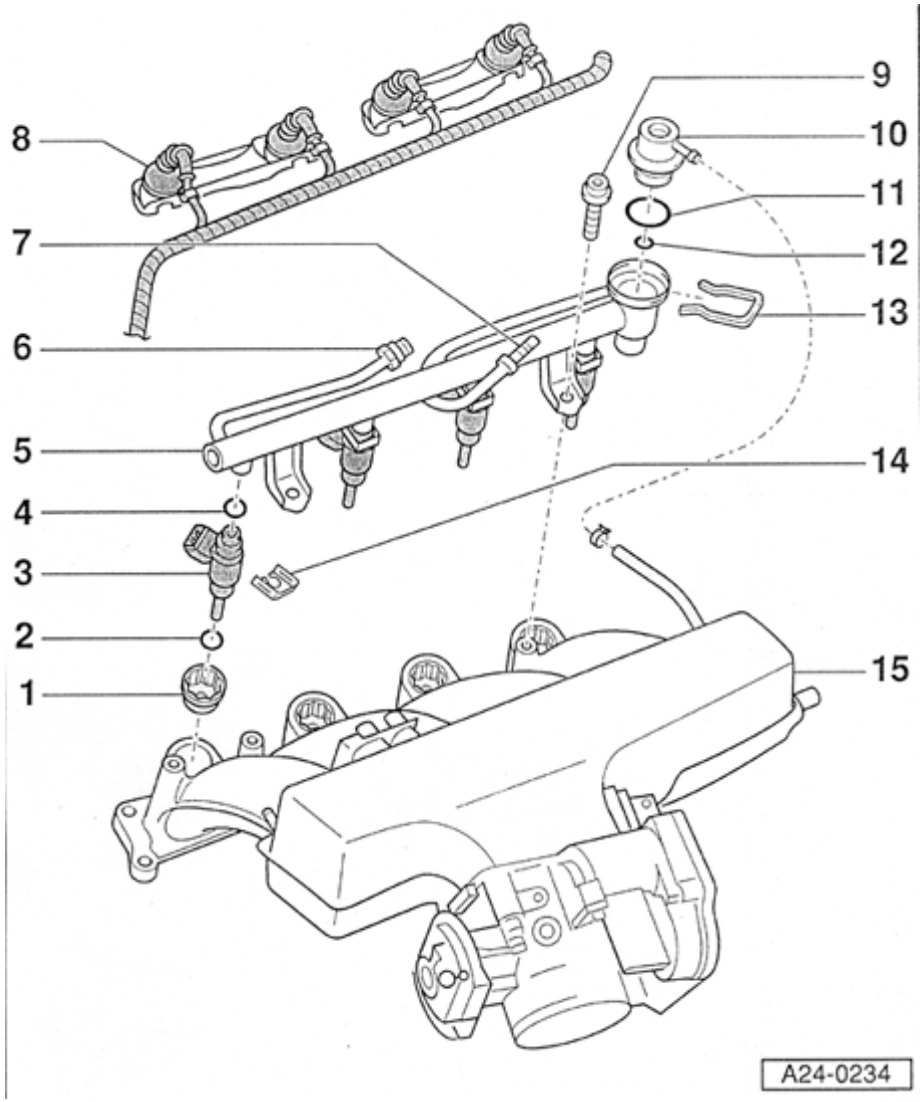

4 - O-ring

- Removing and installing ⇒ Page 24-45
- Always replace
- Coat with clean engine oil

5 - Fuel distributor

6 - Fuel supply line

- Tighten to 25 Nm

7 - Fuel return line

8 - Harness connector

- for injectors
- 4x

9 - Socket head bolt- 10 Nm

10 - Fuel pressure regulator

cardiagn.com

24-44

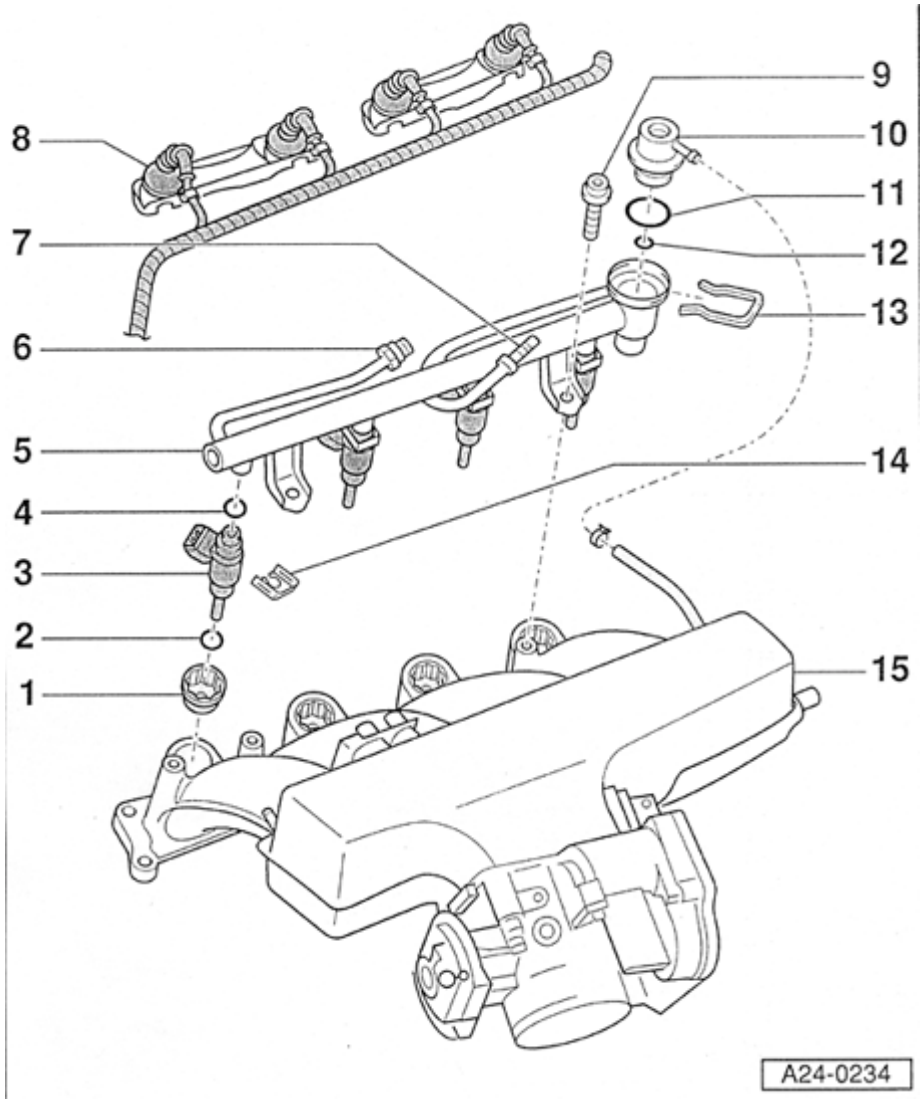

11 - O-ring

- Always replace

12 - O-ring

- Always replace

13 - Retaining clip

- For fuel pressure regulator

14 - Retaining clip

- Make sure clip is correctly seated on fuel injector and fuel rail

15 - Intake manifold

- With throttle valve control module -J338-
- with Intake Air Temperature (IAT) sensor -G42-
- Removing

⇒ *Repair Manual, 1.8 Liter 4-Cyl. 5V Engine Mechanical, Engine Code(s): AWM, Repair Group 15; Cylinder head, removing and installing; Intake manifold, removing and installing*

cardiagn.com

24-45

Fuel injectors, removing and installing

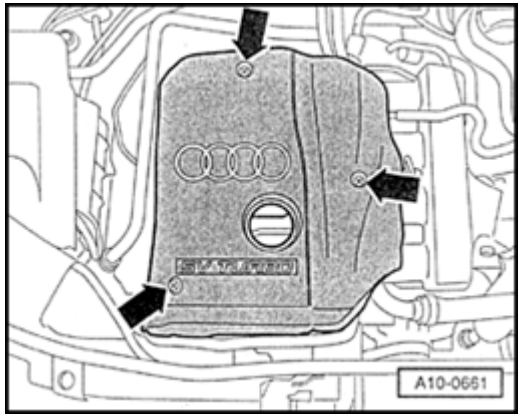

- Remove engine cover (arrows).
- Disconnect wiring/connectors at:
- Fuel injectors -N30-, -N31-, -N32-, -N33-
- Intake Air Temperature (IAT) sensor -G42-
- Camshaft Position (CMP) sensor 2 -G40-
- Throttle valve control module -J338-

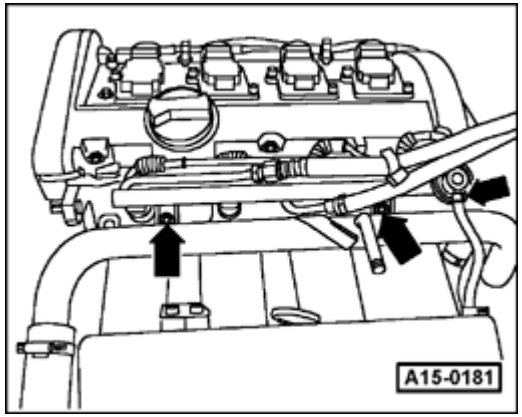

- Remove retaining bolts for fuel supply rail and disconnect vacuum line at fuel pressure regulator (arrows).

cardiagn.com

24-46

- Disconnect fuel distributor with injectors from intake plenum and set aside in rear of engine compartment on a clean cloth.

WARNING!

Fuel system is under pressure! Before opening system, place rags around the connection point. Then release pressure by carefully loosening connection.

- Disengage retaining clip and remove fuel injector.

Note:

Fuel lines must be removed before replacing fuel distributor.

Installation is reverse of removal, noting the following:

- Remove O-rings at all opened connections. (Never remove plastic cap from valve head ro replace front O-ring - pry O-ring off over plastic cap).

- Lightly lubricate O-rings with clean engine oil.

cardiagn.com

24-47

- Make sure fuel injectors are in place and seated correctly
- Check clip for unobstructed fitting.
- Place fuel rail with secured fuel injectors onto intake manifold, and apply uniform pressure to press it in.

Tightening torque

Component	Nm
Fuel distributor at intake manifold	10

cardiagn.com

24-48

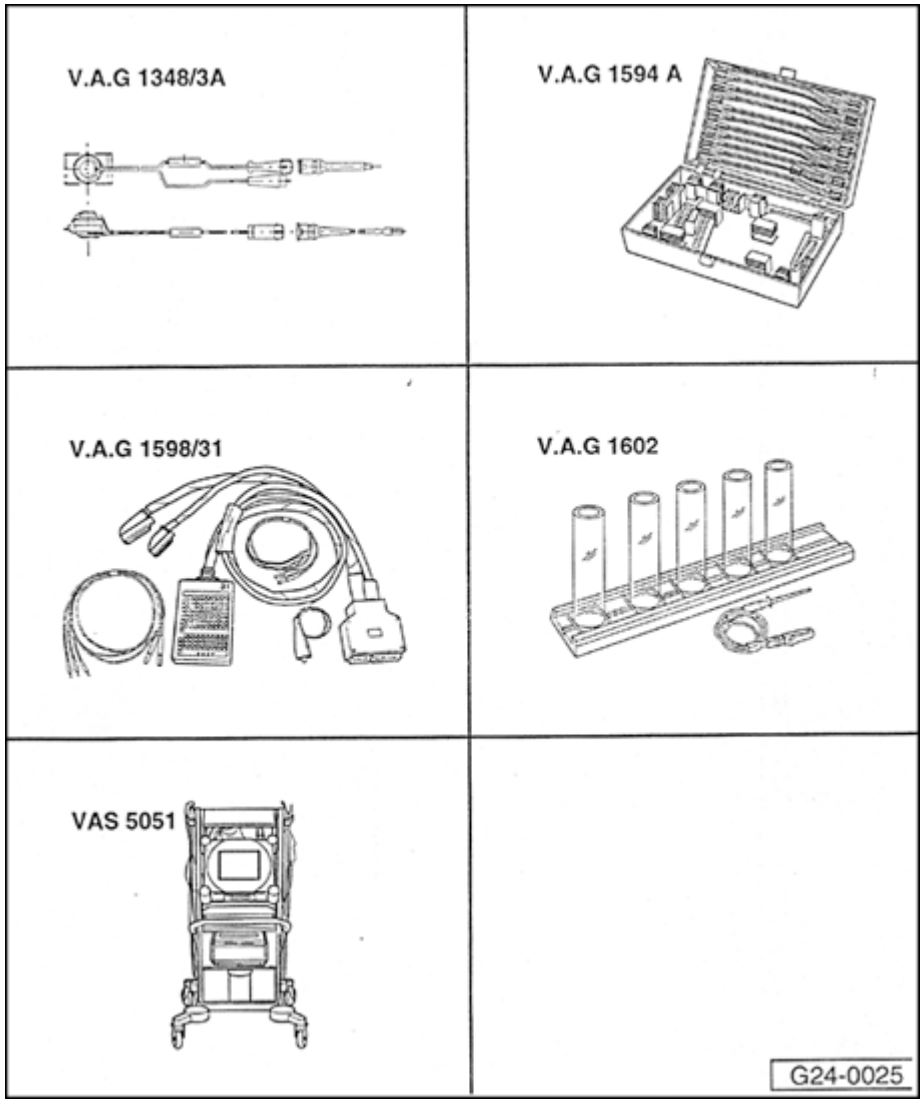

Injection quantity, proper seal and spray pattern of fuel injectors, checking

Special Tools and Equipment

- VAG1348/3A
- VAG1594A
- VAG1598/31
- VAG1602
- VAS5051 with VAG5051/1

cardiagn.com

Test requirement:

- Fuel pressure OK, checking ⇒ Page 24-32 .

Test sequence

- Remove fuel distributor including fuel injectors from intake manifold ⇒ Page 24-45 . Fuel lines remain connected.

- Connect VAG1598/31 test box at wiring harness to Engine Control Module (ECM), do not connect ECM ⇒ Page 24-19 .

Checking Proper Seal

- Bridge terminals 1 and 65 at test box using wires from VAG1594A adapter test kit.

- Switch ignition on.

  ◆ Fuel Pump (FP) must run.

- Check proper seal of fuel injectors (visual inspection). With Fuel Pump (FP) running, only 1 to 2 drops per minute may drip out per injector.

- If fuel loss is greater, stop Fuel Pump (FP) from

cardiagn.com

running (switch off ignition) and replace faulty fuel injector ⇒ Page 24-45 .

cardiagn.com

24-50

Checking Injection Quantity

- Insert fuel injector to be tested in a measuring glass from VAG1602 injection quantity test device.

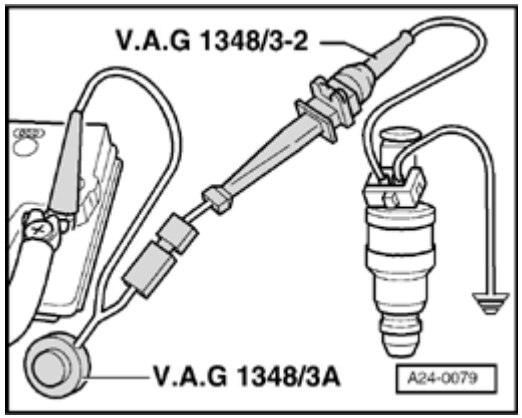

- Connect one terminal of fuel injector to engine Ground (GND) using an adapter cable and an alligator clip from VAG1594A connector test kit.
- Connect the second terminal of fuel injector to B+ using VAG1348/3A remote control, VAG1348/3-2 adapter cable and assisting cable.
- Bridge terminals 1 and 65 at test box using wires from VAG1594A adapter test kit.
- Bridge terminals 1 and 65 at test box using wires from VAG1594A adapter test kit.
- Switch ignition on.
  - ♦ Fuel Pump (FP) must run.
- Activate VAG1348/3A remote control for 30 seconds.
- Perform measurement on all fuel injectors.

cardiagn.com

- After all four fuel injectors have been activated, place measuring glasses on an even surface.

  - Specified value for each fuel injector: 135 ± 10 ml

- If measured value of one or more fuel injectors is outside of specified range, switch Fuel Pump (FP) off (switch ignition off) and replace faulty fuel injector ⇒ Page 24-45 .

- If the measured values of all fuel injectors are outside the specified range, check fuel pressure ⇒ Page 24-32 .

Note:

Also check spray pattern when checking injection quantity. Spray pattern must be the same for all injectors

- Install fuel injectors together with fuel distributor ⇒ Page 24-46 .

cardiagn.com

24-52

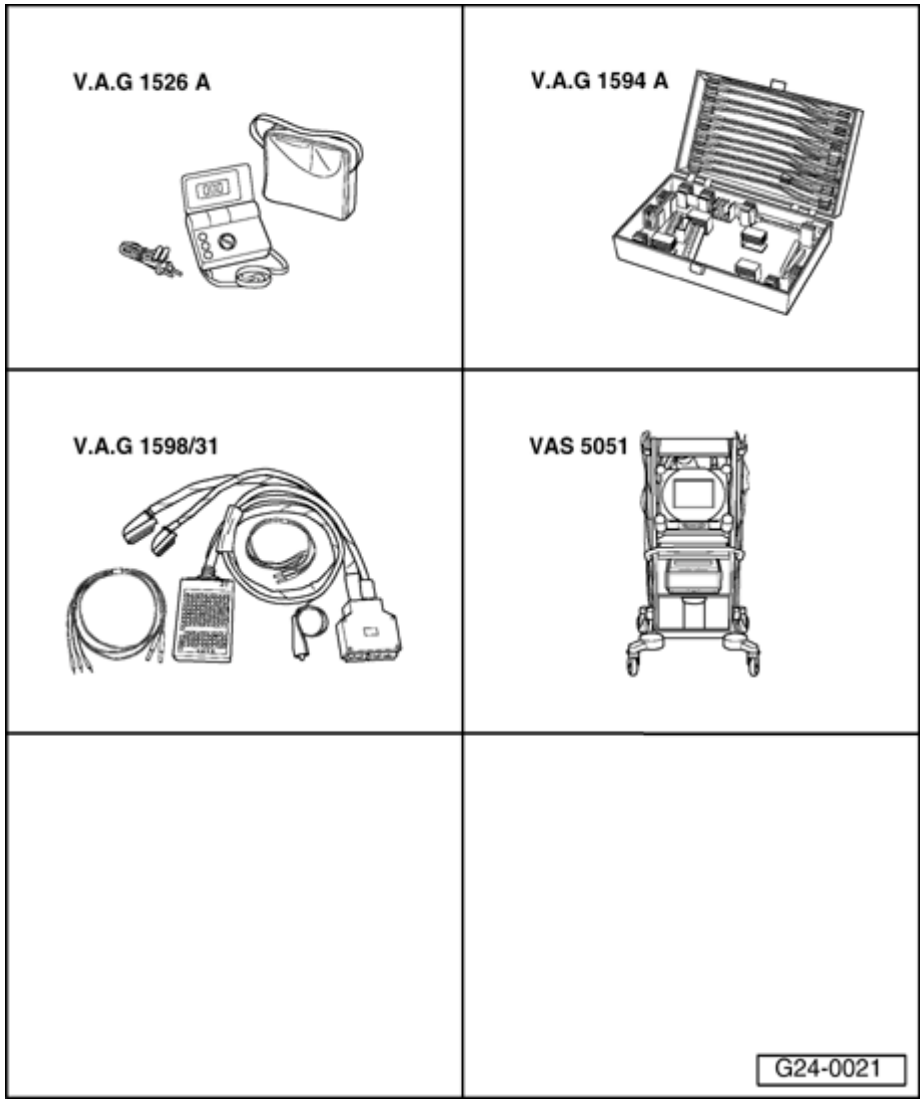

Fuel Pump (FP) relay -J17- and activation, checking

Special Tools and Equipment

- VAG1526A
- VAG1594A
- VAG1598/31
- VAS5051 with VAG5051/1

cardiagn.com

Component location ⇒ Overview of component locations ⇒ Page 24-5

Voltage is supplied to the Fuel Pump (FP) and several components of the injection system via the Fuel Pump (FP) relay -J17-.

Engine must be turning for Fuel Pump (FP) relay -J17- to close. This means that the relay does not receive Ground (GND) (via ECM) until the ECM recognizes RPM signals.

Test requirement:

- Battery voltage at least 12.7 V

Function test of Fuel Pump (FP) relay

- Remove driver-side storage compartment.

⇒ *Repair Manual, Body Interior, Repair Group 68*

- Connect VAS5051 tester ⇒ Page 01-7 and select vehicle system "01 - Engine electronics". Ignition must remain switched on for this.

- Initiate output Diagnostic Test Mode (DTM) ⇒ Page 01-51 and activate Evaporative Emission

cardiagn.com

(EVAP) canister purge regulator valve -N80-.

cardiagn.com

24-54

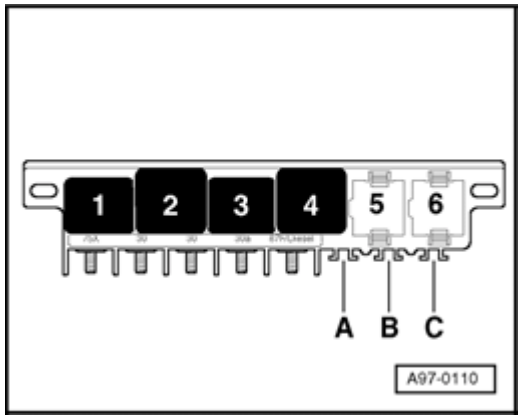

- Fuel Pump (FP) relay (at position 4 of central electronics in driver's footwell, left) must trigger and Fuel Pump (FP) must run.

A - If relay does not trigger:

- Check voltage supply of Fuel Pump (FP) relay ⇒ Page 24-54 .
- Checking activation of Fuel Pump (FP) relay ⇒ Page 24-55 .

B - If relay triggers, but Fuel Pump (FP) does not run:

- Check voltage supply for Fuel Pump (FP) and components (via Fuel Pump -FP- relay) ⇒ Page 24-57 .

Check voltage supply of Fuel Pump (FP) relay

- Remove Fuel Pump (FP) relay.

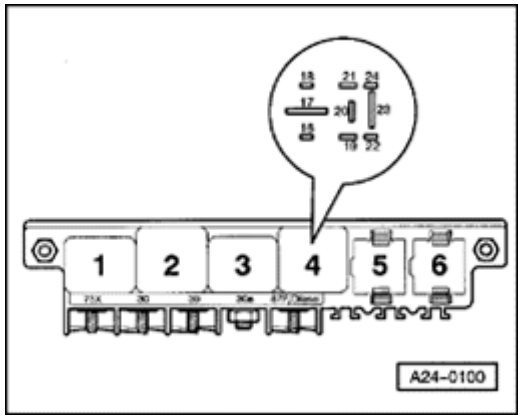

- Connect multimeter to terminal 17 of relay socket and Ground (GND) for voltage measurement.
  - Specification: approx. battery voltage

cardiagn.com

24-55

If specified value is not obtained:

- Replace central electronics.

Checking activation of Fuel Pump (FP) relay

- Switch ignition off.

- Connect VAG1598/31 test box at wiring harness to Engine Control Module (ECM), do not connect ECM ⇒ Page 24-19 .

- Switch ignition on.

- Bridge terminals 1 and 65 at test box using wires from VAG1594A adapter test kit.

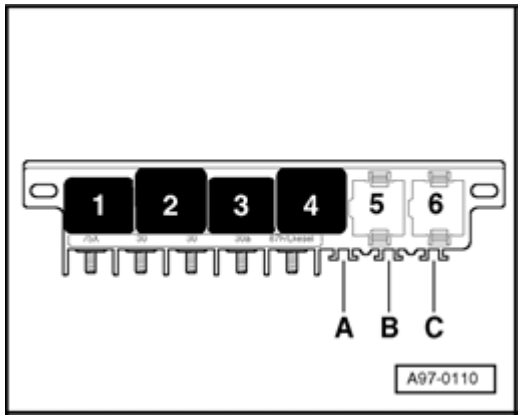

- Fuel Pump (FP) relay (at position 4 of central electronics in driver's footwell, left) must trigger.

If relay triggers now, but didn't during output DTM:

- Replace Engine Control Module (ECM) ⇒ Page 24-22

If relay does not trigger:

- Switch ignition off.
- Remove cable bridge.

cardiagn.com

- Remove Fuel Pump (FP) relay.

cardiagn.com

24-56

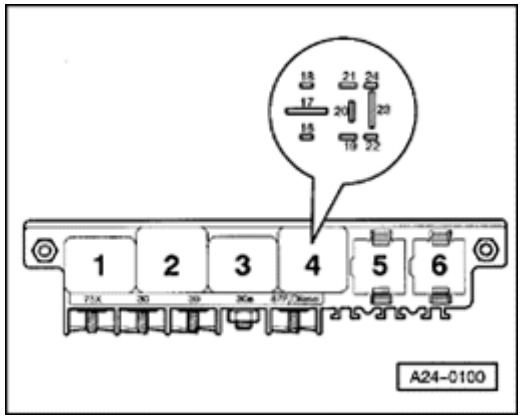

- Connect multimeter for voltage measurement as follows.

Central electronicsin driver-side footwell, left, position 4 Terminal	Measure to
19	Engine Ground (GND)

- Switch ignition on.
  - ♦ Specification: approx. battery voltage

If specified value is not obtained:

- Check wire connections.

⇒ *Electrical Wiring Diagrams, Troubleshooting & Component Locations*

If specified value is obtained:

- Check the following wire connection for open circuit and short circuit to Ground (GND) and B+:

Central electronicsin driver-side footwell, left, position 4 Terminal	VAG1598/31 test box Socket

cardiagn.com

16	65

cardiagn.com

24-57

- Repair open circuit or short circuit if necessary.

If no malfunctions are detected:

- Replace Fuel Pump (FP) relay -J17-.

- Re-connect Engine Control Module (ECM).

Check voltage supply for Fuel Pump (FP) and components

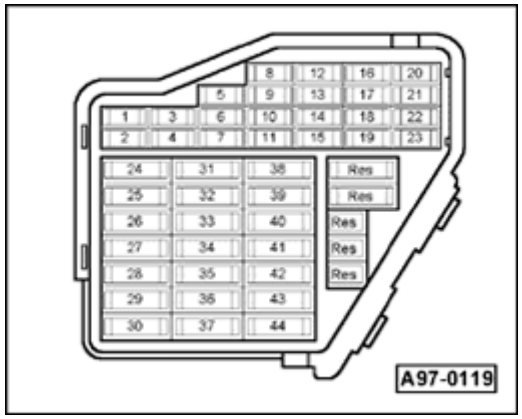

- Remove fuses S228, S232, and S234 (positions 28, 32, and 34) from fuse holder.
- Initiate output Diagnostic Test Mode (DTM) ⇒ Page 01-51 and activate Evaporative Emission (EVAP) canister purge regulator valve -N80-.
- Connect multimeter for voltage measurement to Ground (GND) and to one terminal of the following fuses in the fuse holder.

Circlip	Specified value at one of the terminals
S228	approx. battery voltage
S232	approx. battery voltage
S234	approx. battery voltage

cardiagn.com

24-58

If specified values are not obtained:

- Repeat test at another terminal of fuse socket.

If specified values are not obtained again:

- Check wire connections.

⇒ *Electrical Wiring Diagrams, Troubleshooting & Component Locations*

If no malfunctions are detected:

- Replace Fuel Pump (FP) relay -J17-.

- Re-insert the fuses.

cardiagn.com

24-59

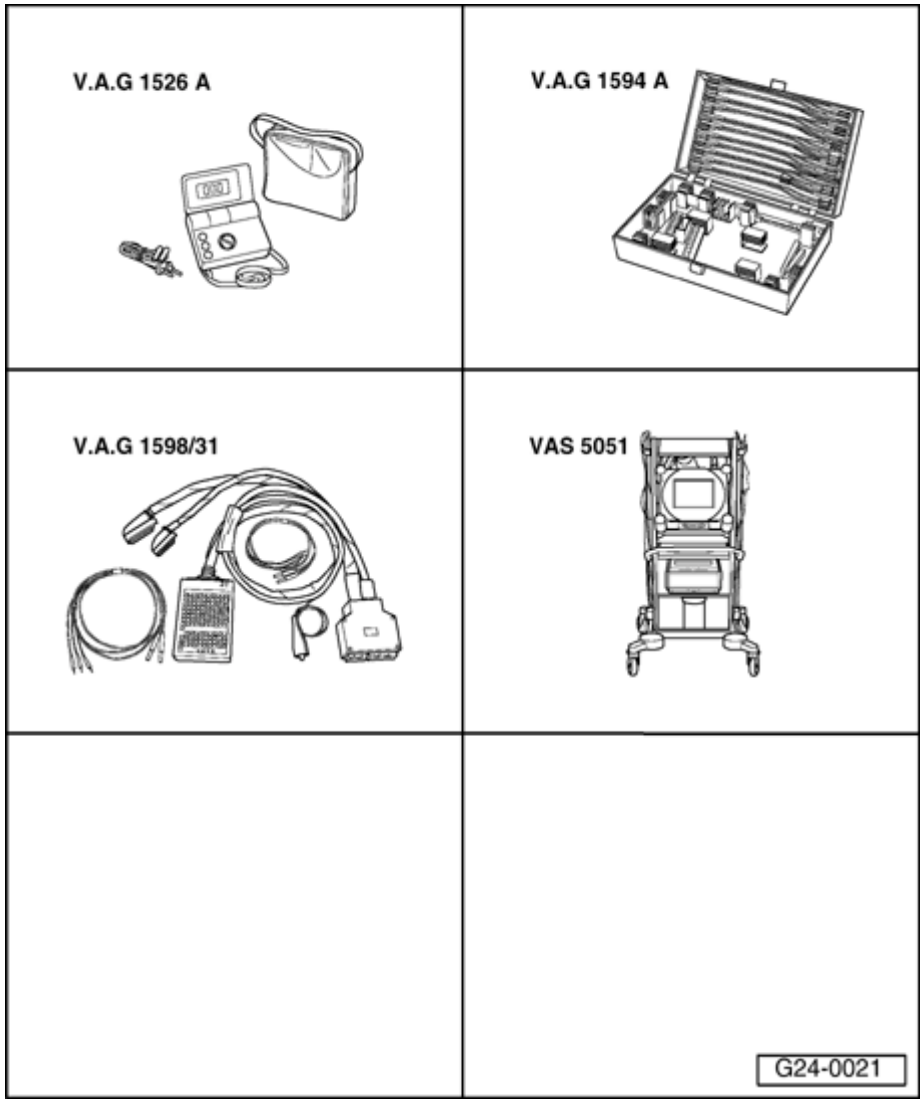

Mass Air Flow (MAF) sensor -G70-, checking

Special Tools and Equipment

- VAG1526A
- VAG1594A
- VAG1598/31
- VAS5051 with VAG5051/1

cardiagn.com

24-60

Component location ⇒ Overview of component locations ⇒ Page 24-5

Test requirements:

- Coolant Temperature at least 80 °C.
- Electrical consumers switched off (radiator fan must NOT run during test).
- A/C switched off.

Checking function

- Connect VAS5051 tester ⇒ Page 01-7 and select vehicle system "01 - Engine electronics". Engine must run at idle for this.

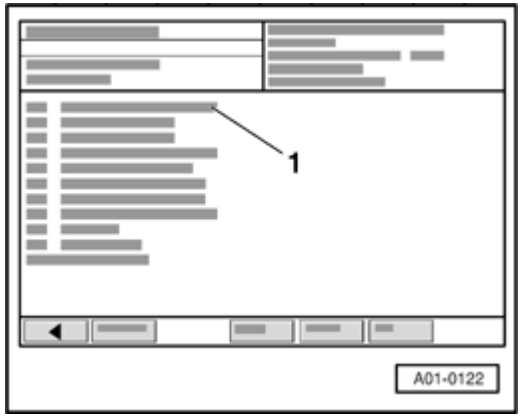

Display on VAS5051:

- In selection -1-, click on the diagnostic function "04 - Basic setting".

cardiagn.com

24-61

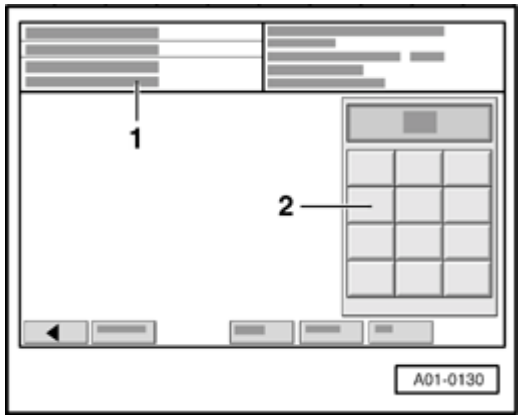

Display on VAS5051:

1 - Enter display group Max. input value = 255

- Select function "002" in button field -2- for "display group number 002" and press Q button to confirm input.

Display on VAS5051:

- Check specified values for load detection in display fields -3- and -4-.

cardiagn.com

24-62

	Display fields			
	1	2	3	4
Display group 002: Air mass taken in with engine at idle and operating temperature				
Display	xxx /min	xxx %	**xx.x ms**	**xxx.x g/s**
Indicated	Engine speed (RPM)	Load	**mean injection time**	**Air mass**
Specified value	FWD: 740 to 860 RPM AWD: 820 to 880 RPM	15 to 35 %	**1.0 to 4.0 ms**	**2.0 to 4.5 g/s**
Note	---	---	**If specified value is not obtained: Evaluation** ⇒ **Page 24-63**	

If specified value is obtained:

- End function "04 - Basic setting" by pressing ◀ button.

cardiagn.com

Evaluation display group 002

Display field: 3	Possible cause	Corrective action
less than 1.0 ms	♦ Smaller values are only possible when driving in deceleration mode	
larger than 4.0 ms	♦ Engine under load due to power accessories.	- Reduce load (A/C system/power steering/generator)
	♦ Poor idle (does not run on all cylinders)	- Check spark plugs. - Check fuel injectors ⇒ Page 24-37 .
	♦ Throttle valve control module - J338- faulty	- Check throttle valve control module ⇒ Page 24-124
Display field: 4	**Possible cause**	**Corrective action**
smaller than 2.0 g/s	♦ large false air mass between intake manifold and Mass Air Flow (MAF) sensor ♦ Voltage supply of Mass Air Flow (MAF) sensor or wire connections to Engine Control Module (ECM)	- Check intake system for leaks (false air) ⇒ Page 24-68 . - Check voltage supply and wire connections ⇒ Page 24-64
larger than 4.5 g/s	♦ Engine under load due to power accessories.	- Reduce load (A/C system/power steering/generator)
	♦ Voltage supply of Mass Air Flow (MAF) sensor or wire connections to Engine Control Module (ECM)	- Check voltage supply and wire connections ⇒ Page 24-64

cardiagn.com

24-64

Voltage supply for Mass Air Flow (MAF) sensor, checking

Test requirements:

- Fuse for Mass Air Flow (MAF) sensor OK

⇒ *Electrical Wiring Diagrams, Troubleshooting & Component Locations*

- Fuel Pump (FP) relay OK; checking ⇒ Page 24-52 .

Note:

Voltage is supplied to Mass Air Flow (MAF) sensor from Fuel Pump (FP) relay.

- Disconnect connector from Mass Air Flow (MAF) sensor.

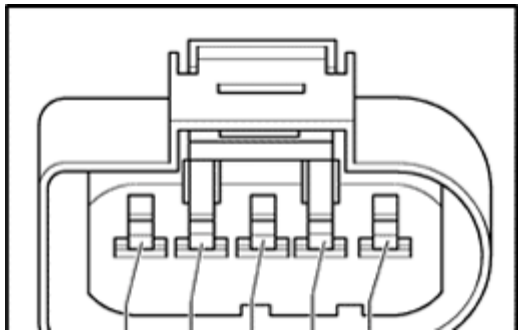

- Connect multimeter for voltage measurement as follows.

Harness connector Terminal	Measure to
2	Engine Ground (GND)

cardiagn.com

- Operate starter briefly (engine can also start).
  - Specification: approx. battery voltage

cardiagn.com

24-65

If specified value is not obtained:

- Check wire connection from terminal 2 of connector to Fuel Pump (FP) relay via fuse for open circuit and short circuit to Ground (GND):

⇒ *Electrical Wiring Diagrams, Troubleshooting & Component Locations*

- Repair open circuit or short circuit if necessary.

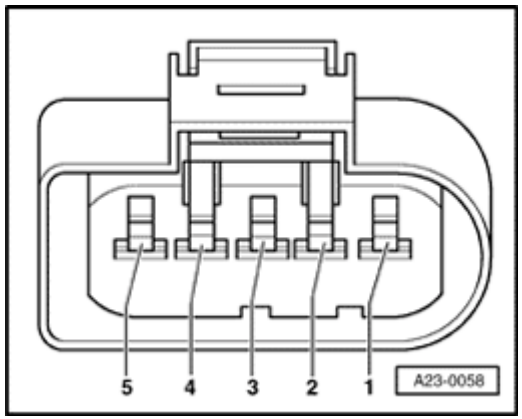

- Connect multimeter to terminal 2 and terminal 3 of connector for voltage measurement.
- Operate starter briefly (engine can also start).
  - ♦ Specification: approx. battery voltage

Note:

Ground (GND) from the ECM is present at terminal 3 of connector.

If specified value is not obtained:

- Check wire connections ⇒ Page 24-67 .

cardiagn.com

24-66

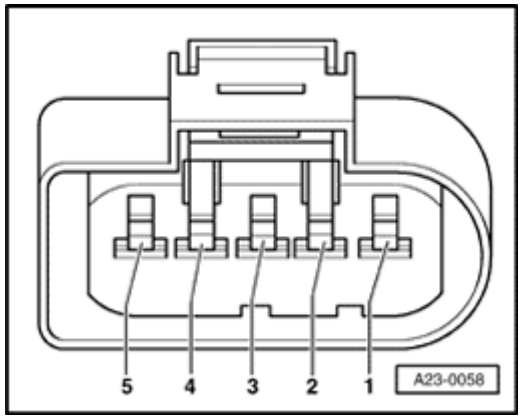

- Connect multimeter to terminal 3 and terminal 4 of connector for voltage measurement.
  - ♦ Specification: about 5 V

If specified value is not obtained:

- Check wire connections ⇒ Page 24-67 .

cardiagn.com

Check wire connections for Mass Air Flow (MF) sensor

Note:

Signal wire is also checked during wire test.

- Connect VAG1598/31 test box at wiring harness to Engine Control Module (ECM), do not connect ECM ⇒ Page 24-19 .

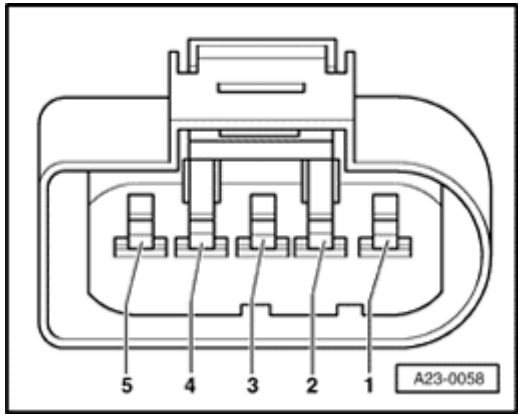

- Check the following wire connections for open circuit and short circuit to Ground (GND) and B+:

Harness connector Terminal	VAG1598/31 test box Socket
3	27
4	53
5	29

- Repair open circuit or short circuit if necessary.
- Also check all wires for short circuit to each other.

If wire connection is OK:

- Replace Mass Air Flow (MAF) sensor -G70-.

cardiagn.com

24-68

Intake system, checking for leaks (unmetered air)

Special tools and equipment

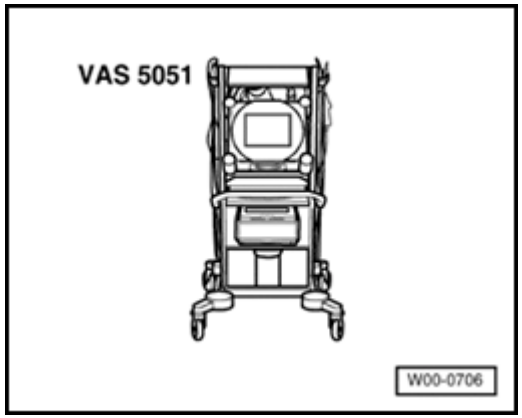

- VAS5051 with VAG5051/1
- Engine leak detection spray G 001 800 A1

Notes:

- *The negative pressure in the intake system sucks in the leak detection spray with the unmetered air. Leak detection spray decreases ignition quality and performance of the fuel mixture. This causes a reduction in engine speed and a sharp increase of CO content.*
- *It is absolutely necessary to follow the safety precautions listed on the can.*

Test sequence

- Connect VAS5051 tester ⇒ Page 01-7 and select vehicle system "01 - Engine electronics". Engine must run at idle for this.

cardiagn.com

24-69

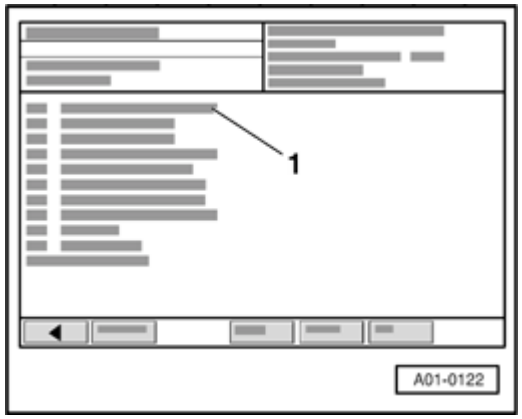

Display on VAS5051:

- Select diagnostic function "08 - Read Measuring Value Block" in selection -1-.

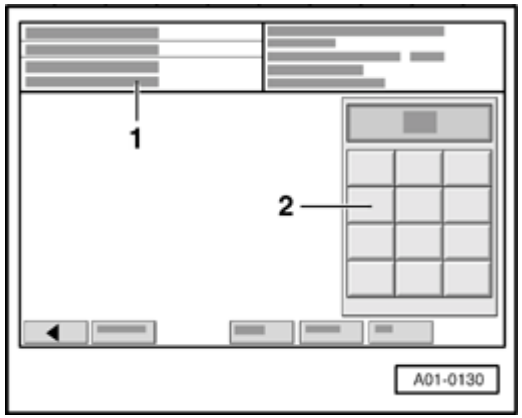

Display on VAS5051:

1 - Enter display group Max. input value = 255

- Select function "001" in button field -2- for "display group number 001" and press Q button to confirm input.

cardiagn.com

24-70

➢ Display on VAS5051:

- Make note of engine speed in display field -1.
- Spray intake system parts with engine leak detection spray in a systematic manner.

If engine speed decreases:

- Check sprayed part of intake system for leaks, and eliminate the error.
- Press "08 - erase DTC memory" to end function ◀ -button.
- Select "06 - End Output"
- Switch ignition off.

cardiagn.com

24-71

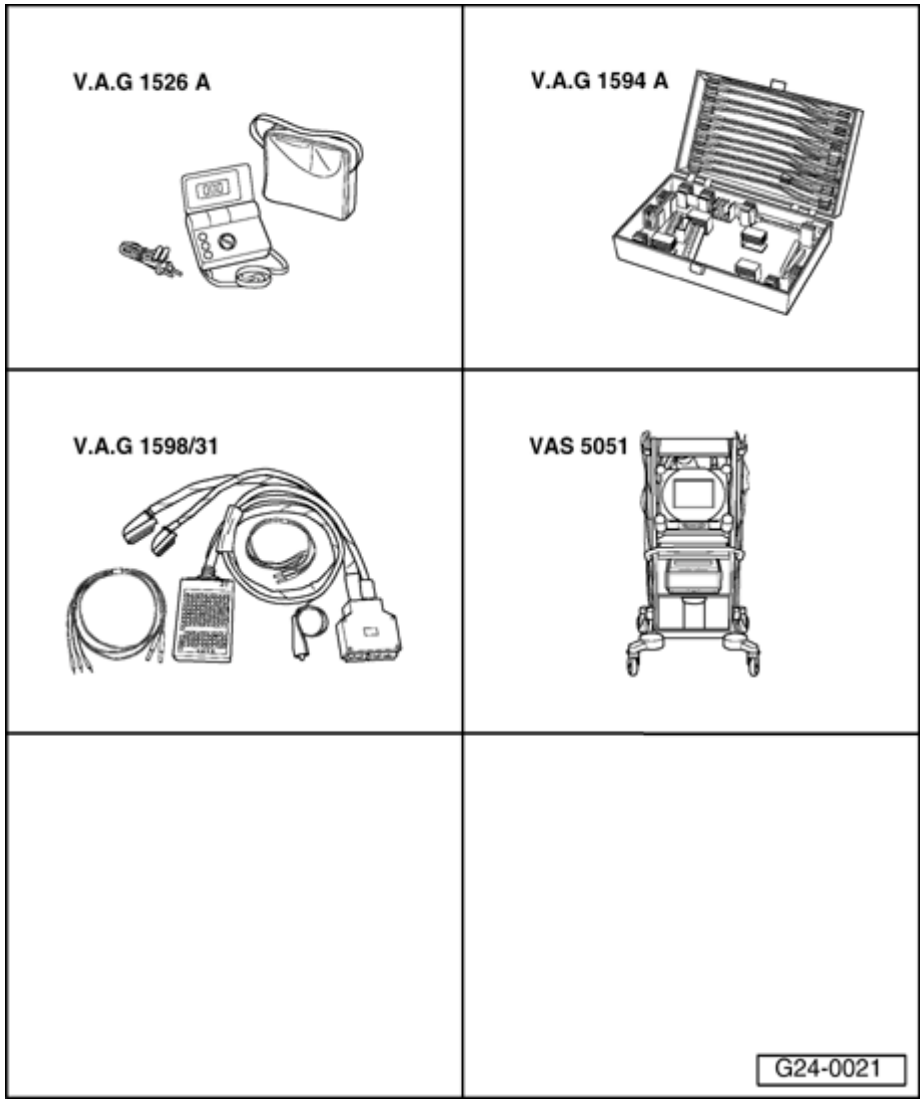

Oxygen sensor control, checking

Oxygen sensor and oxygen sensor control before catalytic converter, checking

Special Tools and Equipment

- VAG1526A
- VAG1594A
- VAG1598/31
- VAS5051 with VAG5051/1

cardiagn.com

24-72

Test requirements:

- Exhaust system free of leaks.
- Coolant Temperature at least 80 °C.

Test sequence

- Connect VAS5051 tester ⇒ Page 01-7 and select vehicle system "01 - Engine electronics". Engine must run at idle for this.

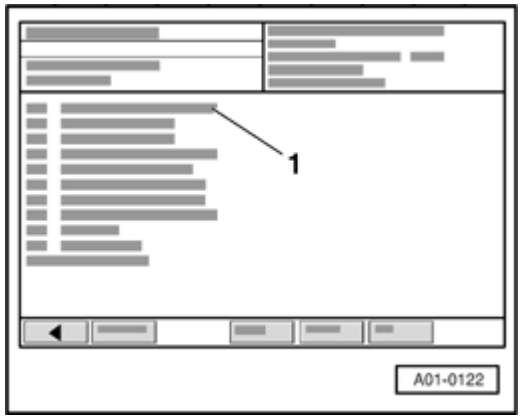

➢ Display on VAS5051:

- In selection -1-, click on the diagnostic function "04 - Basic setting".

cardiagn.com

24-73

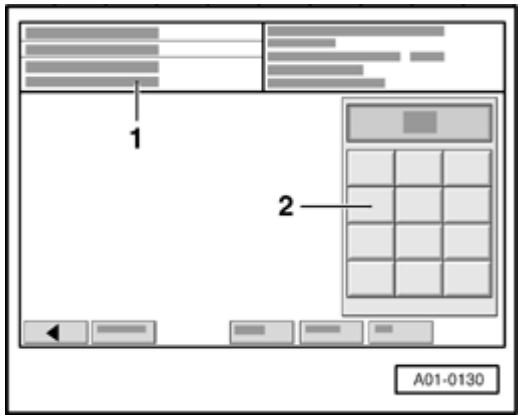

Display on VAS5051:

1 - Enter display group Max. input value = 255

- Select function "030" in button field -2- for "display group number 030" and press Q button to confirm input.

Display on VAS5051:

- Check specified value in display field -1-.

Notes:

- *Increase engine speed to obtain specified values faster.*
- *"Oxygen sensor status" indicates status of oxygen sensor control and oxygen sensors.*

cardiagn.com

24-74

	Display fields			
	1	2	3	4
Display group 030: Oxygen sensor status				
Display	**X X X**	X X X		
Indicated	**Oxygen sensor status, bank 1, sensor 1**	Oxygen sensor status, bank 2, sensor 1		
Functional range	**0 = off** **1 = on**	0 = off 1 = on		
Specified value	**1 1 1**	1 1 0		
Note	**If specified value is not obtained ⇒ Page 24-81** **If specified value is obtained but there is a malfunction stored in DTC memory ⇒Check oxygen sensor adaptation values and control, ⇒ Page 24-75**			

Significance of 3 digit indications in display group 030			
X	X	X	**Display fields 1 and 2**
		X	Oxygen sensor control: 0= not active; 1 = active
	X		Operational readiness of oxygen sensor: 0= not active; 1 = active
X			Condition of oxygen sensor heater: 0= not active; 1 = active

Note:

The first field of the 3 digit indication (heating) fluctuates between 0 and 1.

cardiagn.com

24-75

Display on VAS5051:

- Do not continue test until indication in display field -1- has reached "111" at least once.

Checking oxygen sensor adaptation values and control

- Press ▲ button 2 times to change into display group 032.
- Check oxygen sensor adaptation values in display fields -1- and -2-.

	Display fields			
	1	2	3	4
Display group 036: Oxygen sensor adaptation values				
Display	**xx.x %**	**xx.x %**		
Indicated	**Oxygen sensor adaptation value bank 1, sensor 1at idle (additive)**	**Oxygen sensor adaptation value bank 1, sensor 1at partial throttle(multiple)**		
Specified value	**-6.0 to 6.0 %**	**-10.0 to 10.0 %**		
Note	**If specified value is not obtained ⇒ Page 24-78**			

cardiagn.com

24-76

- Press ▲ button to change into display group 033.

- Check oxygen sensor control in display fields -1- and -2-.

	Display fields			
	1	2	3	4
Display group 033: Oxygen sensor control				
Display	**xx.x %**	**x.xxx V**		
Indicated	**Oxygen sensor control bank 1, sensor 1**	**Oxygen sensor voltage, Bank 1, sensor 1**		
Specified value	**Value must fluctuate at least 2 % in the range -10.0 to 10.0 %**	**0.130 to 3.600 volts**		
Note	**If specified value is not obtained ⇒ Continuation, ⇒ Page 24-77**	**If specified value is not obtained ⇒ Evaluation display group 033, ⇒ Page 24-80**		

Note for display field 2:

The oxygen sensor voltage signal which is processed and calendered by the Engine Control Module (ECM) will be displayed. 1.5 volts in display corresponds to Lambda 1.

cardiagn.com

Continuation

If specified value in display field 1 is not obtained or if value does not fluctuate at least 2 %:

- Road test vehicle in order to free oxygen sensor of possible residue and repeat test.

If specified value in display field 1 is not obtained even after road test or if value does not fluctuate at least 2 %:

- Check primary voltage ⇒ Page 24-81 .

- Test oxygen sensor heater before catalytic converter ⇒ Page 24-89 .

- Check oxygen sensor before catalytic converter for aging ⇒ Page 24-84 .

cardiagn.com

Display group 032

Display field: 1 / 2	Possible cause	Corrective action
Oxygen sensor adaptation values below specified range	♦ Leak in intake area (pressure side between turbocharger and intake manifold)	- Check intake system for leaks and repair false air ⇒ Page 24-68
	♦ Oil thinning	- Oil change or perform swift country road test
	♦ High oil consumption	
	♦ Mass Air Flow (MAF) sensor faulty	- Mass Air Flow (MAF) sensor, checking ⇒ Page 24-59
	♦ Evaporative Emission (EVAP) canister purge regulator valve remains stuck in open position	- Check Evaporative Emission (EVAP) canister purge regulator valve ⇒ Page 24-114
	♦ Fuel pressure too high	- Check fuel pressure regulator ⇒ Page 24-32
	♦ Fuel injector does not close	- Check fuel injectors ⇒ Page 24-37 .
	♦ Oxygen sensor heating faulty ♦ Oxygen sensor faulty	- Check oxygen sensor heating ⇒ Page 24-89

cardiagn.com

Display group 032

Display field: 1 / 2	Possible cause	Corrective action
Oxygen sensor adaptation values via specified range	♦ False air in intake area	- Check intake system for leaks and repair false air ⇒ Page 24-68
	♦ Fuel pressure too low	- Check fuel pressure regulator ⇒ Page 24-32
	♦ Mass Air Flow (MAF) sensor faulty	- Mass Air Flow (MAF) sensor, checking ⇒ Page 24-59
	♦ Oxygen sensor heating faulty ♦ Oxygen sensor faulty	- Check oxygen sensor heating ⇒ Page 24-89
	♦ Fuel injector does not open or opens only partially	- Check fuel injectors ⇒ Page 24-37 .
	♦ Evaporative Emission (EVAP) Canister Purge Regulator Valve sticks	- Check Evaporative Emission (EVAP) canister purge regulator valve ⇒ Page 24-114

cardiagn.com

Evaluation display group 033

Display field: 2	Possible cause	Corrective action
larger than 4.800 V	♦ Short circuit to B+ in wire connections between oxygen sensor and control module ♦ Oxygen sensor faulty	- Check oxygen sensor wires of oxygen sensor before catalytic converter ⇒ Page 24-82
smaller than 0.130 V	♦ Short circuit to Ground (GND) in wire connections between oxygen sensor and control module ♦ Oxygen sensor faulty	- Replace oxygen sensor before catalytic converter

cardiagn.com

24-81

Checking primary voltage

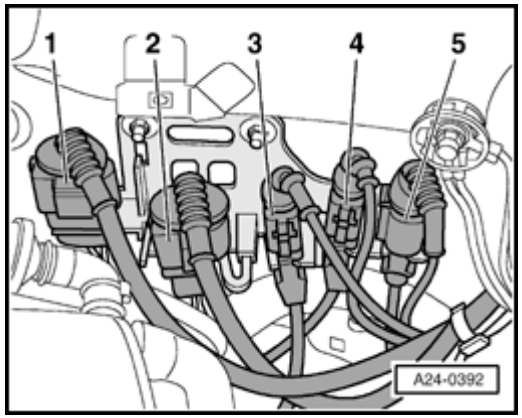

- Disconnect 6-pin harness connector (black) -2- to Heated Oxygen Sensor (HO2S) -G39- before catalytic converter.

Note:

Coolant reservoir screws must be removed and coolant reservoir must be placed to side in order to access the harness connector. The coolant hoses can remain connected.

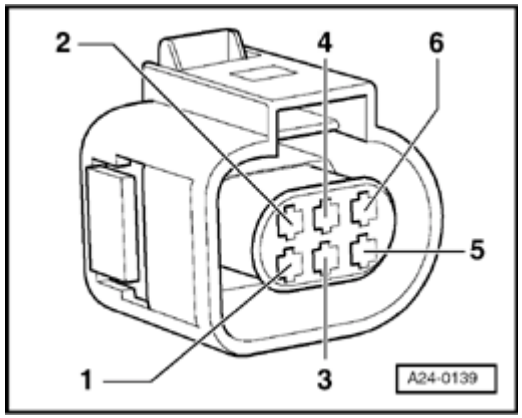

- Connect multimeter between terminal 1 and 5 for voltage measurement.
- Switch ignition on.
  - ♦ Specification: 0.400 to 0.500 V
- Switch ignition off.

cardiagn.com

24-82

If specified value is not obtained:

- Check oxygen sensor wiring.

If specified value is obtained:

- Replace Heated Oxygen Sensor (HO2S)-G39-
  .

Checking oxygen sensor wires

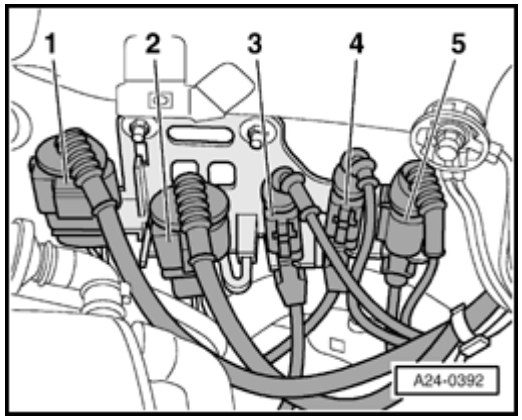

- Disconnect 6-pin harness connector (black) -2- to Heated Oxygen Sensor (HO2S) -G39- before catalytic converter.

Note:

Coolant reservoir screws must be removed and coolant reservoir must be placed to side in order to access the harness connector. The coolant hoses can remain connected.

- Connect VAG1598/31 test box at wiring harness to Engine Control Module (ECM), do not connect ECM ⇒ Page 24-19 .

cardiagn.com

24-83

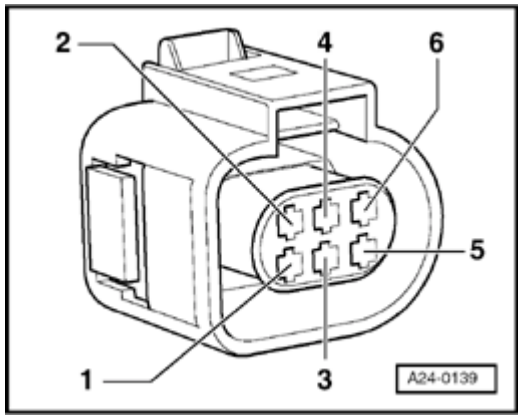

- Check the following wire connections for open circuit.

Harness connector Terminal	VAG1598/31 test box Socket
1	70
2	71
5	51
6	52

- Repair open circuit if necessary.

⇒ *Electrical Wiring Diagrams, Troubleshooting & Component Locations*

- Check wires to each other for short circuit.

If wire connection is OK:

- Replace Engine Control Module (ECM) ⇒ Page 24-22

cardiagn.com

24-84

Oxygen sensor aging, oxygen sensor before catalytic converter, checking

Special Tools and Equipment

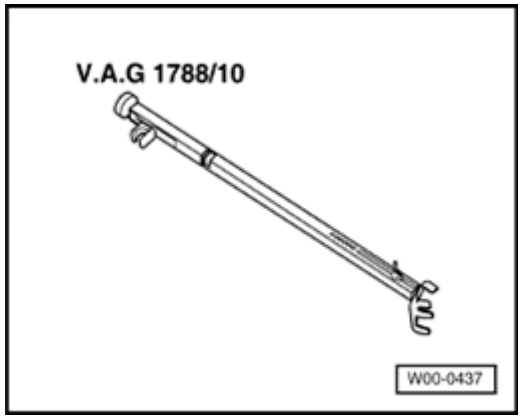

- VAG1788/10 RPM adjuster

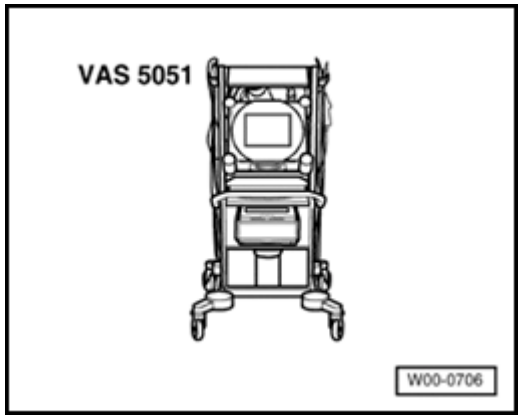

- VAS5051 with VAG5051/1

Test requirement:

- Coolant Temperature at least 80 °C.

cardiagn.com

24-85

Test sequence

- Connect VAS5051 tester ⇒ Page 01-7 and select vehicle system "01 - Engine electronics". Engine must run at idle for this.

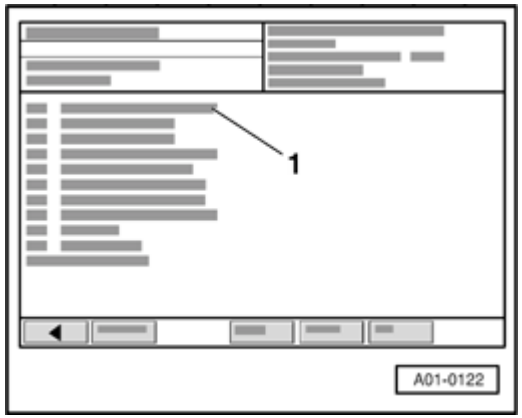

➢ Display on VAS5051:

- In selection -1-, click on the diagnostic function "04 - Basic setting".

cardiagn.com

24-86

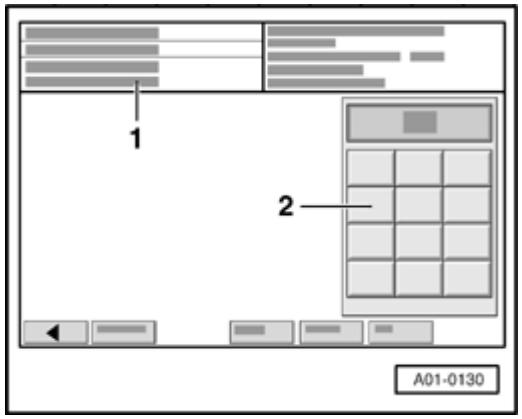

Display on VAS5051:

1 - Enter display group Max. input value = 255

- Select function "034" in button field -2- for "display group number 034" and press Q button to confirm input.
- Use VAG1788/10 RPM adjuster to adjust engine speed to between 2300 and 2800 RPM.

Display on VAS5051:

- Check specified value in display field -4-.

Note:

This process can take a few minutes.

cardiagn.com

24-87

	Display fields			
	1	2	3	4
Display group 034: Diagnostic oxygen sensor aging				
Display	xxxx/min	xxx °C	**x.x**	**---**
Indicated	Engine speed (RPM)	Exhaust temperature	**Dynamic factor**	Diagnostic condition
Functional range				**Test OFF** **Test ON** **B1-S2 OK** **B1-S2 not OK**
Specified value	2300 to 2800 RPM	larger than 350 °C	**0.5 to 2.5**	B1-S2 OK
Note			**If specified value is not obtained ⇒ Continuation, ⇒ Page 24-88**	

Note for display field 2:

Calculated value from engine speed and engine load.

Note for display fields 3 and 4:

The dynamic factor is a characteristic for oxygen sensor aging. The smaller the dynamic factor, the further the oxygen sensor aging process has advanced.

cardiagn.com

24-88

Continuation

If specified value in display field 3 and 4 is not obtained:

- Road test vehicle in order to free oxygen sensor of possible residue and repeat test.

If specified value in display field 3 and 4 is not obtained, even after road test:

- Replace Heated Oxygen Sensor (HO2S)-G39-
.

cardiagn.com

24-89

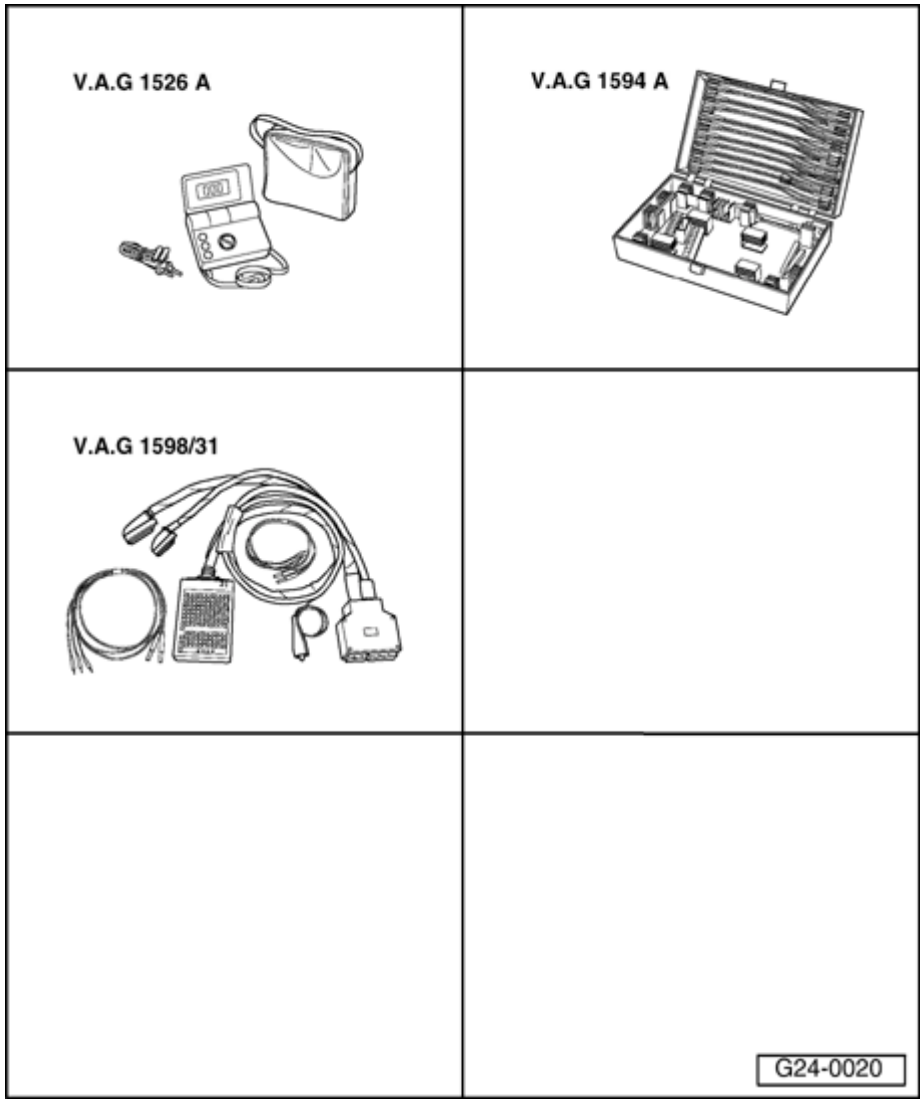

Oxygen sensor heating, Oxygen Sensor (O2S) Heater -Z19- before catalytic converter, checking

Special Tools and Equipment

- VAG1526A
- VAG1594A
- VAG1598/31

cardiagn.com

24-90

Test requirements:

- Coolant Temperature at least 80 °C.
- Fuse for oxygen sensor heating OK

⇒ *Electrical Wiring Diagrams, Troubleshooting & Component Locations*

Test sequence

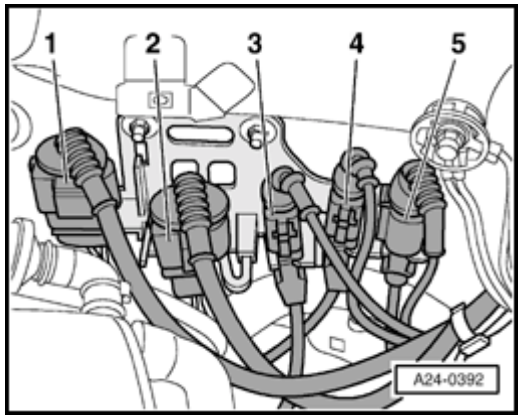

- Disconnect 6-pin harness connector (black) -2- to Heated Oxygen Sensor (HO2S) -G39- before catalytic converter.

Note:

Coolant reservoir screws must be removed and coolant reservoir must be placed to side in order to access the harness connector. The coolant hoses can remain connected.

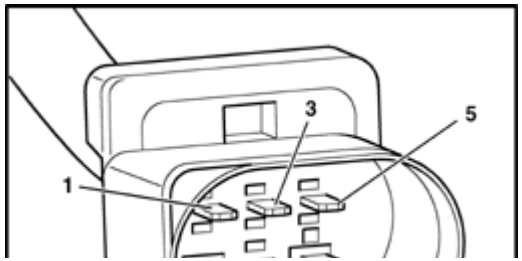

- Connect multimeter between terminal 3 and 4 for resistance measurement.
  - Specified value at room temperature: 2.5 to 10 Ω

If specified value is not obtained:

cardiagn.com

- Replace Heated Oxygen Sensor (HO2S)-G39-.

cardiagn.com

24-91

If specified value is obtained:

- Check voltage supply of oxygen sensor heating.

Checking voltage supply for oxygen sensor heating

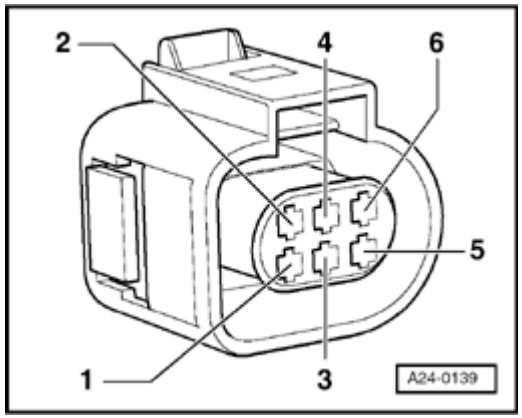

- Connect multimeter between terminal 3 and 4 for voltage measurement.
- Start engine.
  - ♦ Specification: approx. battery voltage

Note:

When the Engine Control Module (ECM) switches oxygen sensor heating on and off, it may be observed via the function "read measuring value block", in display group number 041 display field 2.

If there is no voltage:

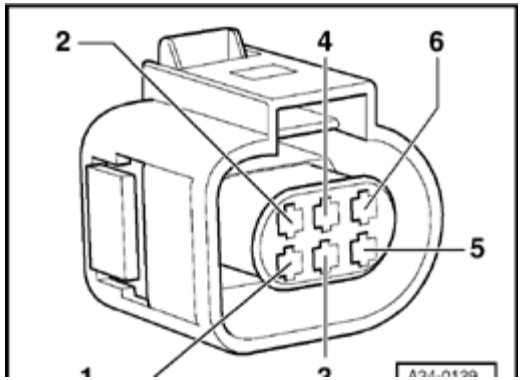

- Connect multimeter for voltage measurement as follows.

Harness connector Terminal	Measure to
3 (B+)	Vehicle Ground (GND)

cardiagn.com

24-92

- Operate starter briefly.

  ♦ Specification: approx. battery voltage

If there is no voltage again:

- Check wire connection from terminal 3 of connector to Fuel Pump (FP) relay via fuse for open circuit:

⇒ *Electrical Wiring Diagrams, Troubleshooting & Component Locations*

If voltage supply is OK:

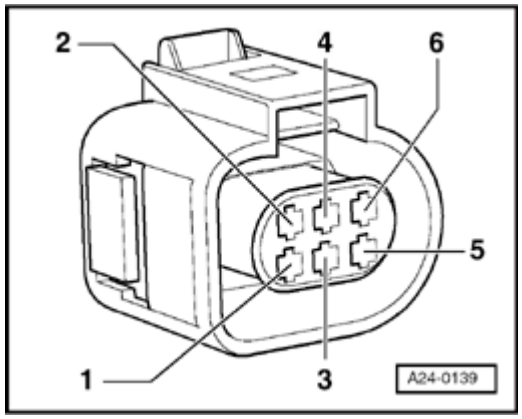

- Connect multimeter for voltage measurement as follows:

Harness connector Terminal	Measure to
4 (Ground -GND- activation of Engine Control Module - ECM-)	B+

- Start engine.

  ♦ Specification: approx. battery voltage

Note:

cardiagn.com

When the Engine Control Module (ECM) switches oxygen sensor heating on and off, it may be observed via the function "read measuring value block", in display group number 041 display field 2.

cardiagn.com

- Switch ignition off.

If there is no voltage:

- Connect VAG1598/31 test box at wiring harness to Engine Control Module (ECM), do not connect ECM ⇒ Page 24-19 .

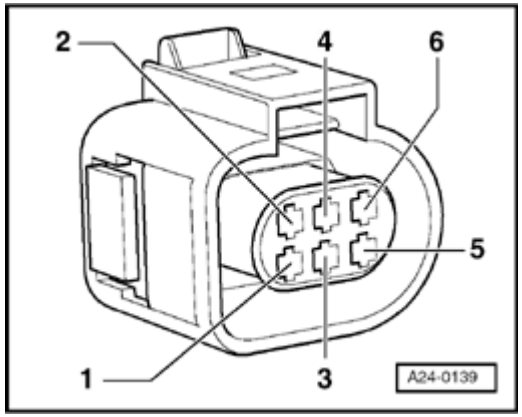

- Check the following wire connection for open circuit:

Harness connector Terminal	VAG1598/31 test box Socket
4	5

- Repair open circuit if necessary.

⇒ *Electrical Wiring Diagrams, Troubleshooting & Component Locations*

If wire connection is OK, but there is no Ground (GND) supply for oxygen sensor heating:

- Replace Engine Control Module (ECM) ⇒ Page 24-22

cardiagn.com

24-94

Heated Oxygen Sensor (HO2S) and oxygen sensor control after Three Way Catalytic Converter (TWC), checking

Note:

The oxygen sensor before catalytic converter (bank 1, sensor 1) regulates to Lambda 1. If this oxygen sensor is damaged, e.g. due to soiling or overheating, the regulation value may have shifted. Deviations from Lambda 1 are detected by the oxygen sensor after catalytic converter (bank 1, sensor 2). If it recognizes the deviations downward or upward, it influences the regulation before catalytic converter, generally increasing or decreasing it respectively.

cardiagn.com

24-95

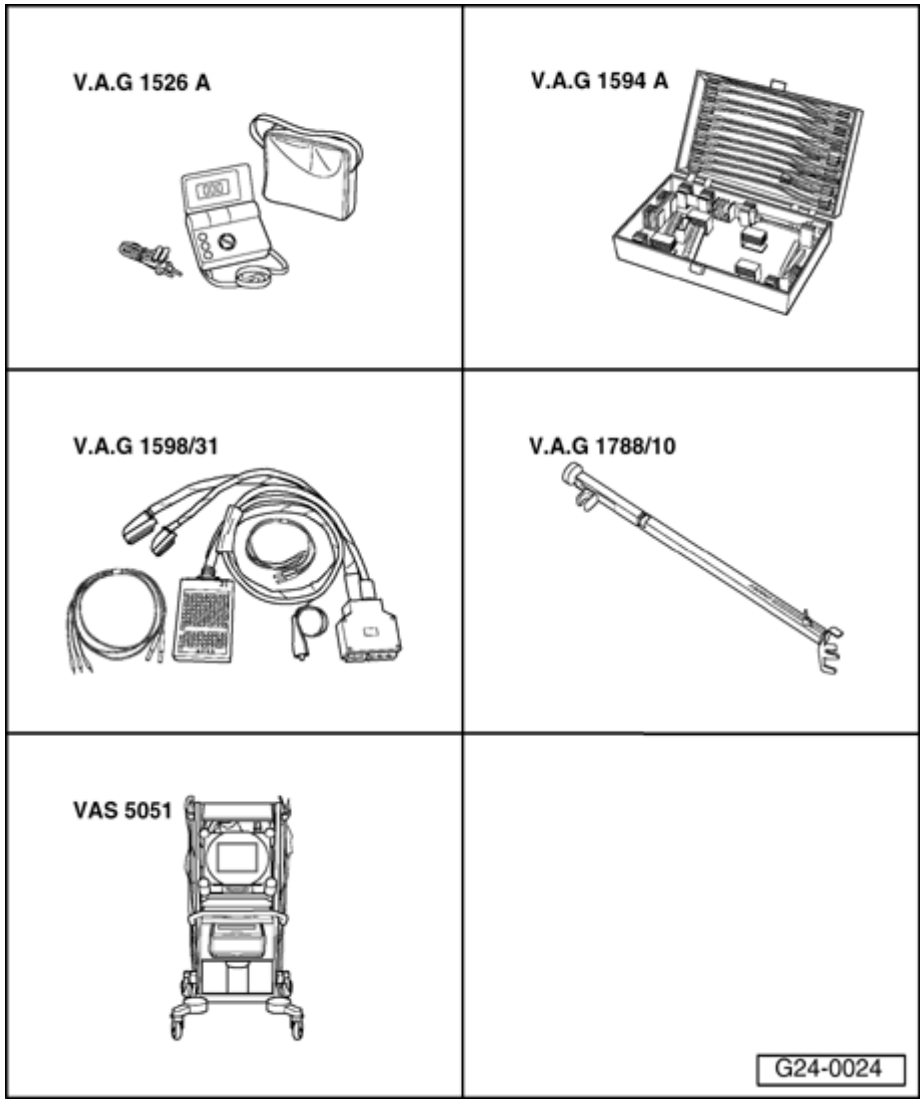

Special Tools and Equipment

- VAG1526A
- VAG1594A
- VAG1598/31
- VAG1788/10 RPM adjuster
- VAS5051 with VAG5051/1

cardiagn.com

24-96

Test requirements:

- Exhaust system free of leaks.
- Coolant Temperature at least 80 °C.

Test sequence

- Connect VAS5051 tester ⇒ Page 01-7 and select vehicle system "01 - Engine electronics". Engine must run at idle for this.
- Install VAG1788/10 RPM adjuster on the accelerator pedal and raise the engine speed to 2600 RPM.

Test requirement:

- Engine running at 2600 RPM.

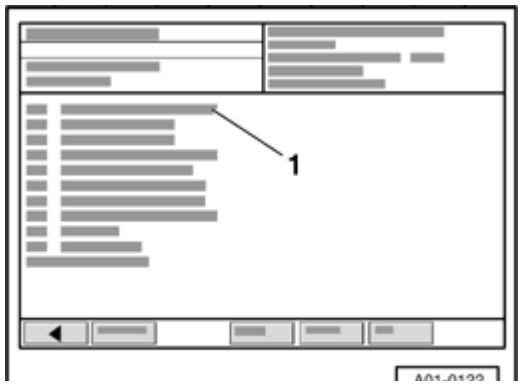

Display on VAS5051:

- In selection -1-, click on the diagnostic function "04 - Basic setting".

cardiagn.com

24-97

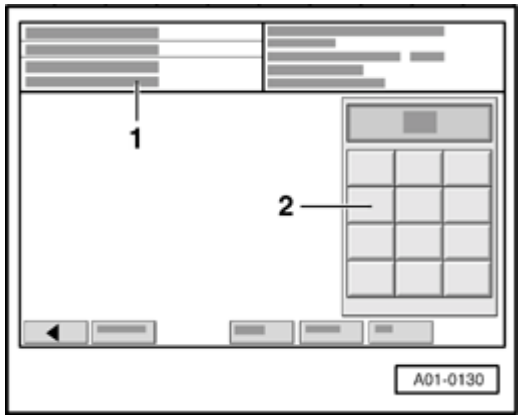

Display on VAS5051:

1 - Enter display group Max. input value = 255

- Select function "030" in button field -2- for "display group number 030" and press Q button to confirm input.

Display on VAS5051:

- Check specified value in display field -2-.

Note:

"Oxygen sensor status" indicates status of oxygen sensor control and oxygen sensors.

cardiagn.com

24-98

	Display fields			
	1	2	3	4
Display group 030: Oxygen sensor status				
Display	X X X	**X X X**		
Indicated	Oxygen sensor status, bank 1, sensor 1	**Oxygen sensor status bank 2, sensor 1**		
Functional range	0 = off 1 = on	**0 = off** **1 = on**		
Specified value	1 1 1	**1 1 0**		
Note	**If specified value is not obtained** ⇒ **Page 24-107**			

Significance of 3 digit indications in display group 030			
X	X	X	**Display fields 1 and 2**
		X	Oxygen sensor control: 0= not active; 1 = active
	X		Operational readiness of oxygen sensor: 0= not active; 1 = active
X			Condition of oxygen sensor heater: 0= not active; 1 = active

Notes:

- *The first position of the 3 digit indication (heating) fluctuates between 0 and 1.*
- *Oxygen sensor control of oxygen sensor after catalytic converter (B1-S2) is not active without engine load.*

cardiagn.com

24-99

Display on VAS5051:

- Do not continue test until indication in display field -2- has reached "110" at least once.

Checking oxygen sensor control after catalytic converter

Test requirement:

- Engine continues to run at 2600 RPM.

- Click on ◀ - button

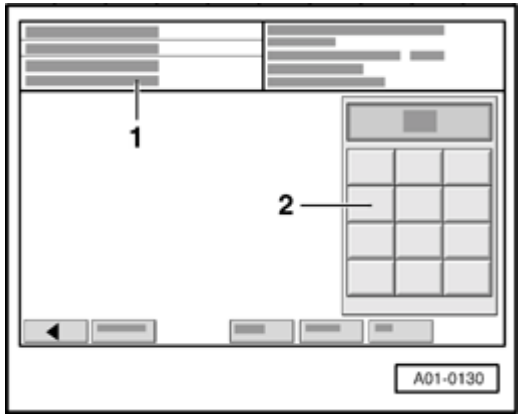

Display on VAS5051:

1 - Enter display group Max. input value = 255

- Select function "037" in button field -2- for "display group number 037" and press -Q- button to confirm input.

cardiagn.com

24-100

Display on VAS5051:

- Check oxygen sensor voltage in display field -2-.
- Check oxygen sensor correction value in display field -3- and diagnostic result in display field -4-.

cardiagn.com

24-101

	Display fields			
	1	2	3	4
Display group 037: Diagnostic oxygen sensor control system				
Display	xxx %	**x.xxx V**	**x.xx**	**---**
Indicated	Engine load	**Oxygen sensor voltage Bank 2, sensor 1**	**Oxygen sensor correction value between bank 1, sensor 1 and bank 1, sensor 2**	Diagnostic condition
Functional range				**Test OFF** **Test ON** **System OK** **System not OK**
Specified value	13 to 40 %	**0.100 to 0.950 volts**	**smaller than 0.02**	System OK
Note		**If specified value is not obtained: Evaluation ⇒ Page 24-102**		**If "System not OK" is displayed: Check DTC memory ⇒ Page 01-12**

Note for display field 2:

Oxygen sensor voltage bank 1, sensor 2 should remain fairly constant. Strong voltage fluctuations point to a damaged catalytic converter.

cardiagn.com

Evaluation display group 037

Display field: 2	Possible cause	Corrective action
constant about 0.450 V	♦ Open circuit in wire 4 between oxygen sensor and control module	- Check primary voltage ⇒ Page 24-104
	♦ Open circuit in wire 3 between oxygen sensor and control module	
larger than 0.950 V	♦ Short circuit to B+ in wire 4 between oxygen sensor and control module	- Check oxygen sensor wiring, oxygen sensor after catalytic converter ⇒ Page 24-105
smaller than 0.100 V	♦ Short circuit to Ground (GND) in wire 4 between oxygen sensor and control module	

cardiagn.com

24-103

Continuation

If specified value in display field 3 and 4 is not obtained:

- Road test vehicle in order to free oxygen sensor of possible residue and repeat test.

If specified value in display field 3 and 4 is not obtained, even after road test:

- Replace Heated Oxygen Sensor (HO2S) -G39-.

Note:

If oxygen sensor voltage is OK and oxygen sensor correction value is still above 0.02 ms, even after a road test, this suggests aging of an oxygen sensor before catalytic converter.

cardiagn.com

24-104

Checking primary voltage

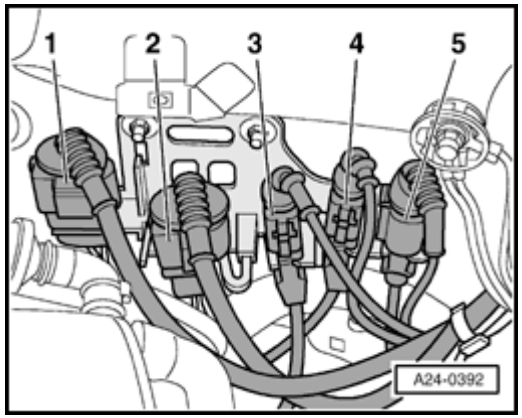

- Disconnect 4-pin harness connector -1- (brown) to Oxygen Sensor (O2S) behind Three Way Catalytic Converter (TWC) -G130-.

Note:

Coolant reservoir screws must be removed and coolant reservoir must be placed to side in order to access the harness connector. The coolant hoses can remain connected.

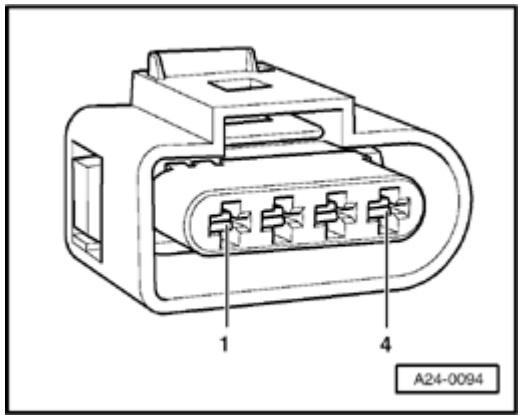

- Connect multimeter between terminal 3 and 4 for voltage measurement.
- Switch ignition on.
  - ♦ Specification: 0.400 to 0.500 V
- Switch ignition off.

cardiagn.com

24-105

If specified value is not obtained:

- Check oxygen sensor wiring.

If specified value is obtained:

- Replace Oxygen Sensor (O2S) behind Three Way Catalytic Converter (TWC) -G130-.

Checking oxygen sensor wires

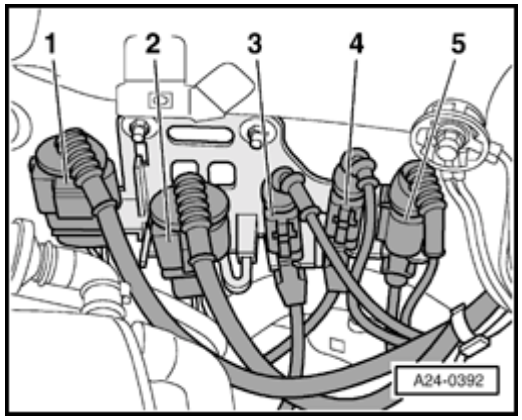

- Disconnect 4-pin harness connector -1- (brown) to Oxygen Sensor (O2S) behind Three Way Catalytic Converter (TWC) -G130-.

Note:

Coolant reservoir screws must be removed and coolant reservoir must be placed to side in order to access the harness connector. The coolant hoses can remain connected.

- Connect VAG1598/31 test box at wiring harness to Engine Control Module (ECM), do not connect ECM ⇒ Page 24-19 .

cardiagn.com

24-106

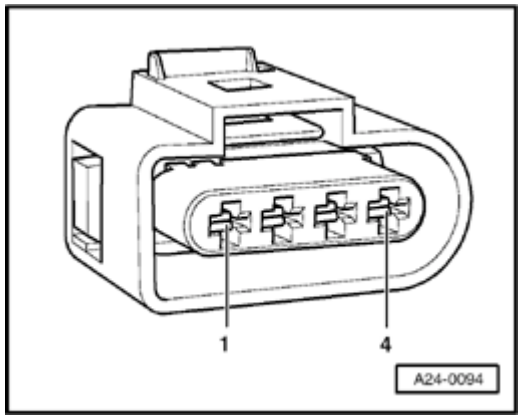

- Check the following wire connections for open circuit.

Harness connector Terminal	VAG1598/31 test box Socket
3	68
4	69

- Repair open circuit if necessary.

⇒ *Electrical Wiring Diagrams, Troubleshooting & Component Locations*

- Check wires to each other for short circuit.

If wire connection is OK:

- Replace Engine Control Module (ECM) ⇒ Page 24-22

cardiagn.com

24-107

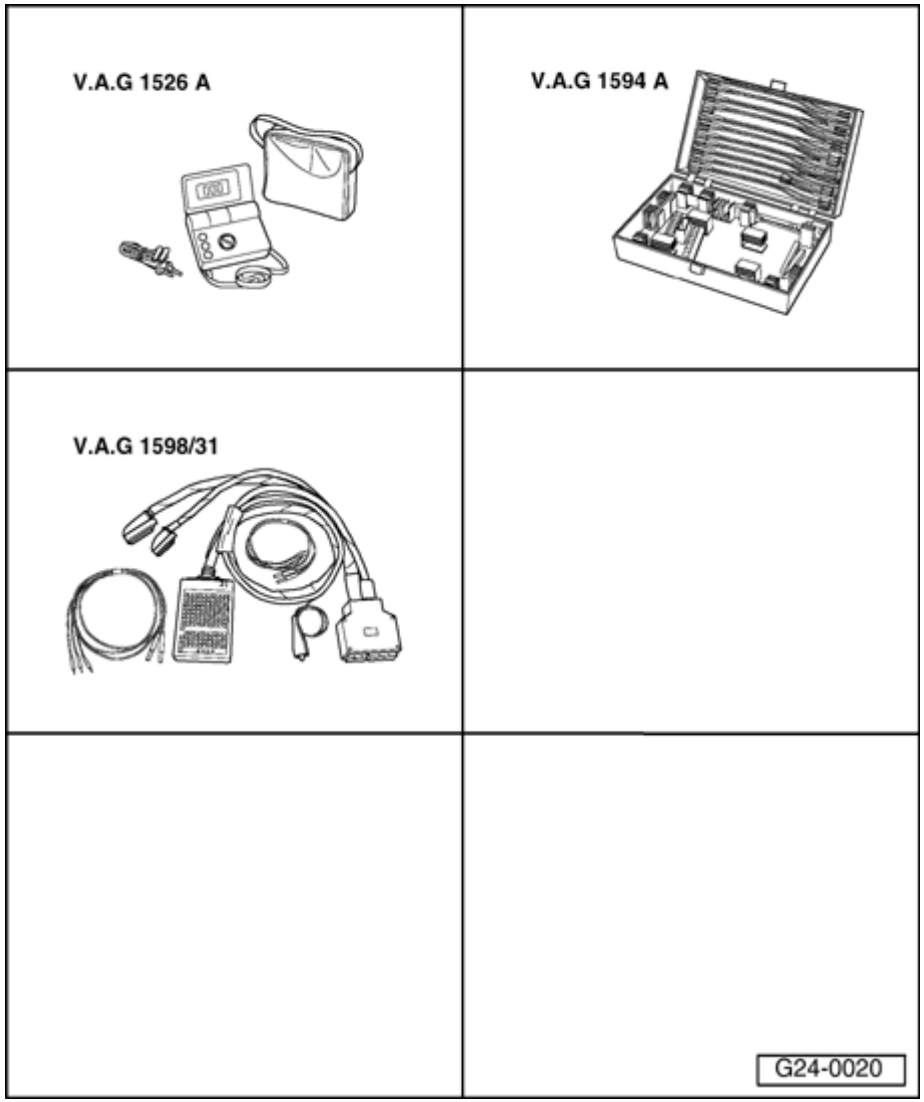

Oxygen sensor heating, Oxygen Sensor (O2S) Heater 1 -Z29- after catalytic converter, checking

Special Tools and Equipment

- VAG1526A
- VAG1594A
- VAG1598/31

cardiagn.com

24-108

Test requirements:

- Coolant Temperature at least 80 °C.
- Fuse for oxygen sensor heating OK

⇒ *Electrical Wiring Diagrams, Troubleshooting & Component Locations*

Test sequence

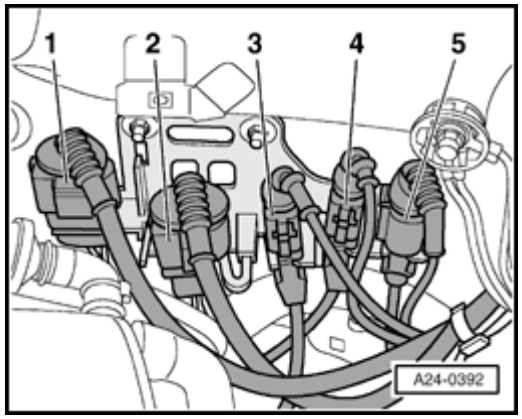

- Disconnect 4-pin harness connector -1- (brown) to Oxygen Sensor (O2S) behind Three Way Catalytic Converter (TWC) -G130-.

Note:

Coolant reservoir screws must be removed and coolant reservoir must be placed to side in order to access the harness connector. The coolant hoses can remain connected.

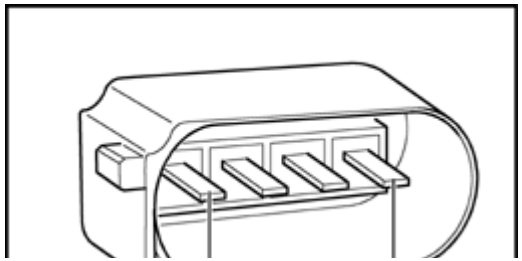

- Connect multimeter between terminal 1 and 2 for resistance measurement.
  - Specified value at room temperature: 6.4 to 47.5 Ω

If specified value is not obtained:

cardiagn.com

- Replace Oxygen Sensor (O2S) behind Three Way Catalytic Converter (TWC) -G130-.

cardiagn.com

24-109

If specified value is obtained:

- Check voltage supply of oxygen sensor heating.

Checking voltage supply for oxygen sensor heating

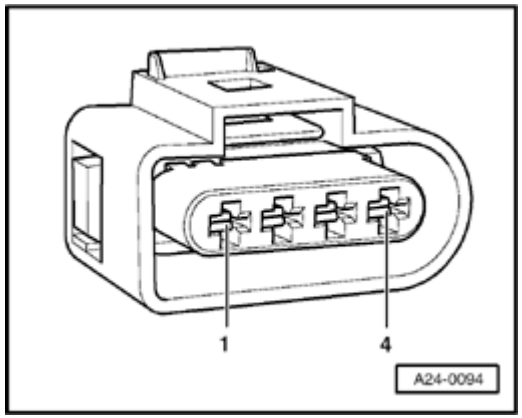

- Connect multimeter between terminal 1 (B+) and 2 (Ground -GND-) for voltage measurement.
- Start engine.
  - ♦ Specification: approx. battery voltage

Note:

When the Engine Control Module (ECM) switches oxygen sensor heating on and off, it may be observed via the function "read measuring value block", in display group number 041 display field 4.

If there is no voltage:

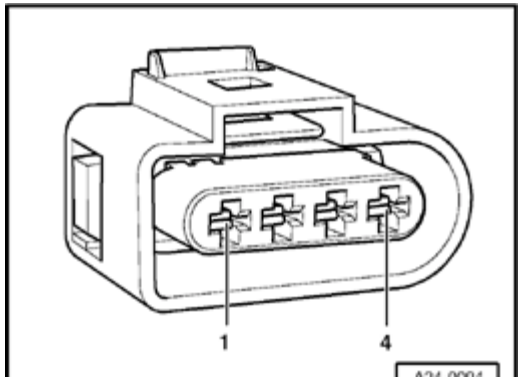

- Connect multimeter for voltage measurement as follows:

Harness connector Terminal	Measure to
1 (B+)	Vehicle Ground (GND)

cardiagn.com

24-110

- Operate starter briefly.

  ♦ Specification: approx. battery voltage

If there is no voltage again:

- Check wire connection from terminal 1 of connector to Fuel Pump (FP) relay via fuse for open circuit:

⇒ *Electrical Wiring Diagrams, Troubleshooting & Component Locations*

If voltage supply is OK:

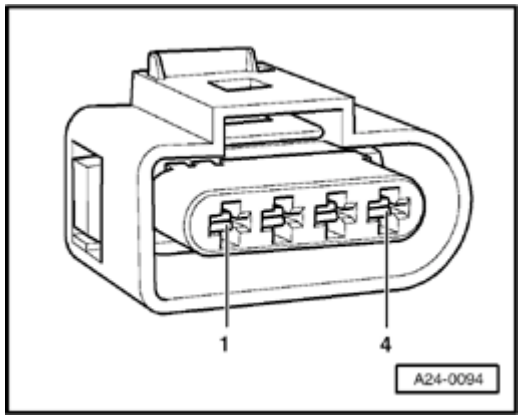

- Connect multimeter for voltage measurement as follows:

Harness connector **Terminal**	**Measure to**
2 (Ground -GND- activation of Engine Control Module -ECM-)	B+

- Start engine.

  ♦ Specification: approx. battery voltage, possibly fluctuating

- Switch ignition off.

cardiagn.com

24-111

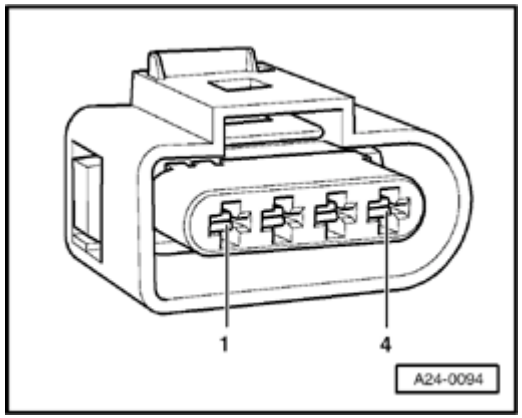

If there is no voltage:

- Connect VAG1598/31 test box at wiring harness to Engine Control Module (ECM), do not connect ECM ⇒ Page 24-19 .

- Check the following wire connection for open circuit:

Harness connector Terminal	VAG1598/31 test box Socket
2	63

- Repair open circuit if necessary.

If wire connection is OK, but there is no Ground (GND) supply for oxygen sensor heating:

- Replace Engine Control Module (ECM) ⇒ Page 24-22

cardiagn.com

24-112

Oxygen sensor, removing and installing

Special tools and equipment

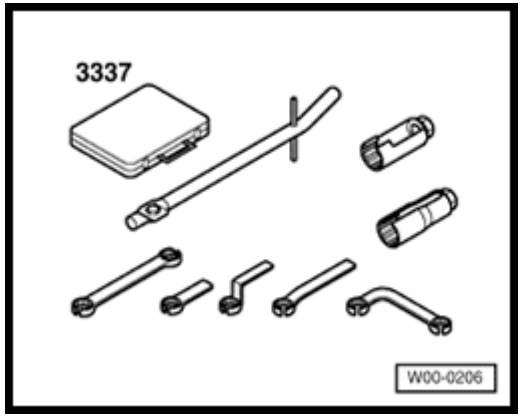

- 3337 wrench, 7-piece set
- Locking compound G 052 112 A3

Procedure

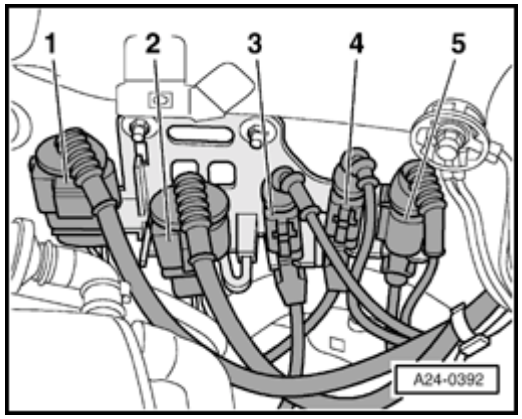

- Disconnect oxygen sensor harness connector and lay to side.

1 - (brown) for Oxygen Sensor (O2S) behind Three Way Catalytic Converter (TWC) -G130-

2 - (black) for Heated Oxygen Sensor (HO2S) -G39- before catalytic converter

Note:

Coolant reservoir screws must be removed and coolant reservoir must be placed to side in order to access harness connectors. The coolant hoses can remain connected.

- Unscrew oxygen sensor using special tool 3337.

cardiagn.com

24-113

Note the following when installing:

Notes:

- *Oxygen sensor threads are coated with an assembly paste. This paste must not contact sensor openings.*
- *Tightening torque: 55 Nm*
- *Cable of oxygen sensor must always be secured in the same position when installing so that contact with the exhaust pipe is avoided.*

cardiagn.com

24-114

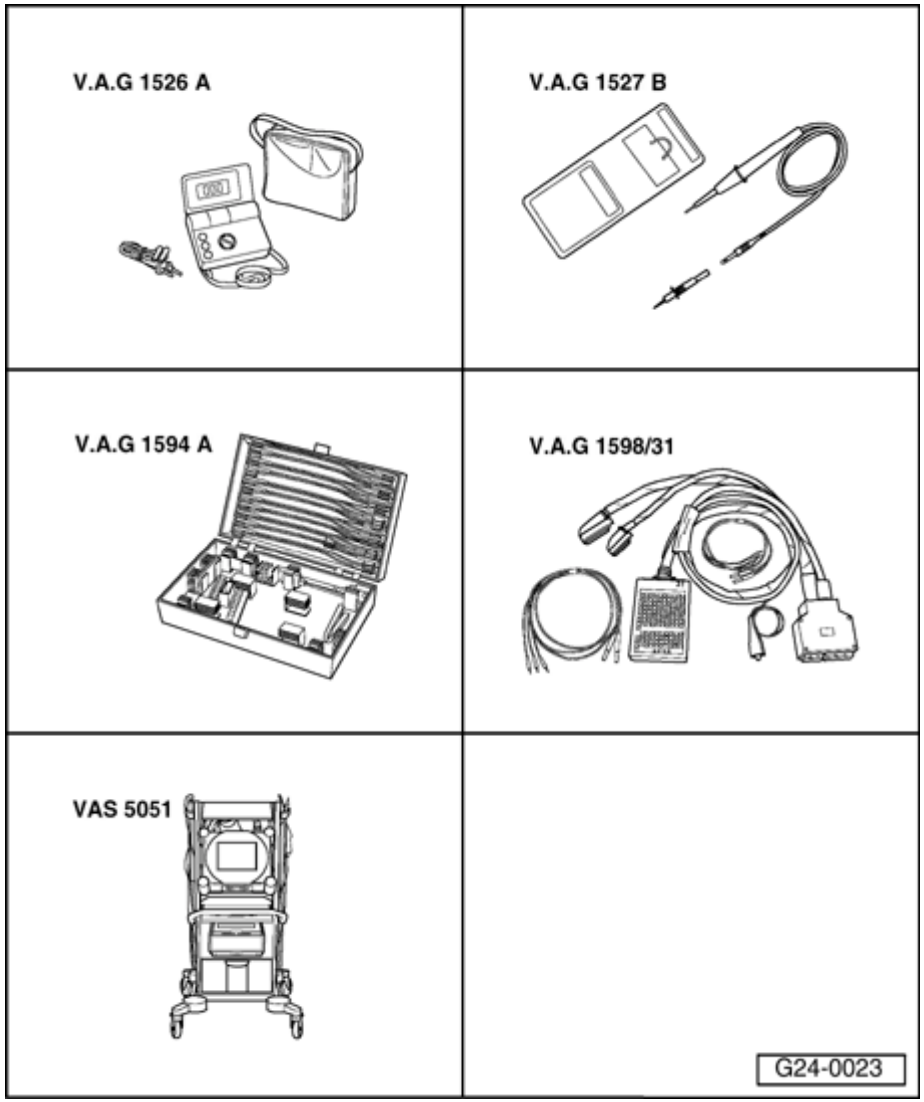

Tank ventilation, checking

Evaporative Emission (EVAP) canister purge regulator valve -N80-, checking

Special Tools and Equipment

- VAG1526A
- VAG1527B
- VAG1594A
- VAS5051 with VAG5051/1

cardiagn.com

24-115

Checking for proper seal

When there is no current, the Evaporative Emission (EVAP) canister purge regulator valve -N80- is closed.

- Disconnect hoses from EVAP valve; harness connector remains connected.

- Attach assisting hose to one connection of EVAP valve.

- Connect VAS5051 tester ⇒ Page 01-7 and select vehicle system "01 - Engine electronics". Ignition must remain switched on for this.

- Initiate output DTM and activate Evaporative Emission (EVAP) canister purge regulator valve -N80- ⇒ Page 01-51 .

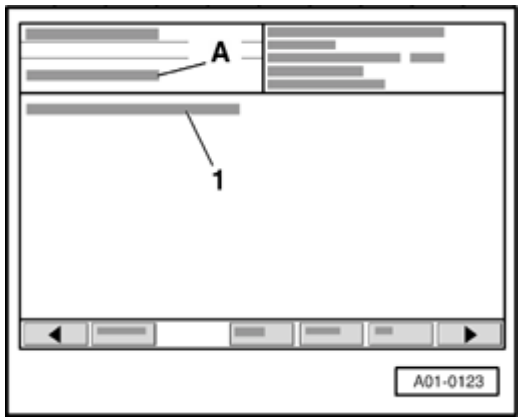

Display on VAS5051:

A - 1. Actuator in test

1 - EVAP canister purge regulator valve -N80-

- Valve must click...
- ...and must open and close (can be tested by blowing into assisting hose).

cardiagn.com

If valve does not click:

- Check internal resistance of EVAP valve.

If valve does not open or close properly:

- Replace Evaporative Emission (EVAP) canister purge regulator valve -N80-.

Checking internal resistance

- Disconnect connector at EVAP valve.

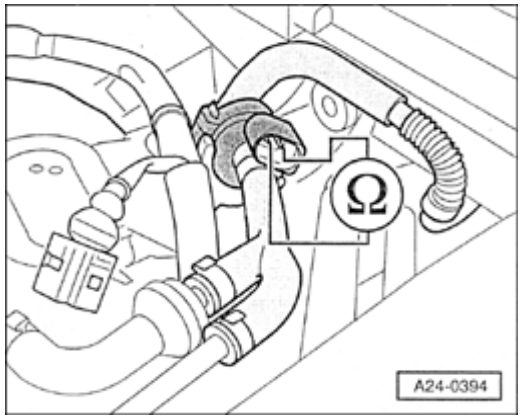

- Connect multimeter at valve for resistance measurement.
  - Specification: 22 to 30 Ω

If specified value is not obtained:

- Replace Evaporative Emission (EVAP) canister purge regulator valve -N80-.

If specified value is obtained:

- Check voltage supply ⇒ Page 24-117 .

cardiagn.com

24-117

Checking voltage supply

Test requirements:

- Fuse for the EVAP valve OK.

⇒ *Electrical Wiring Diagrams, Troubleshooting & Component Locations*

- Fuel Pump (FP) relay OK; checking ⇒ Page 24-52 .

Note:

Voltage is supplied to the EVAP valve via the Fuel Pump (FP) relay.

- Disconnect connector at EVAP valve.

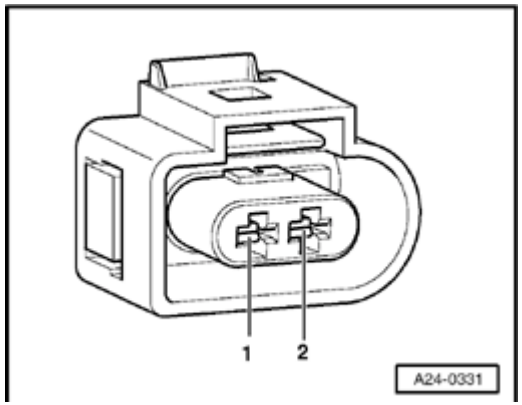

- Connect VAG1527B voltage tester as follows:

Harness connector Terminal	Measure to
1	Engine Ground (GND)

- Operate starter briefly (engine can also start).
  - ♦ LED must light up.

cardiagn.com

24-118

If LED does not light up:

- Check wire connection from terminal 1 of connector to Fuel Pump (FP) relay via fuse for open circuit:

⇒ *Electrical Wiring Diagrams, Troubleshooting & Component Locations*

- Repair open circuit if necessary.

If LED lights up:

- Checking activation.

Checking activation

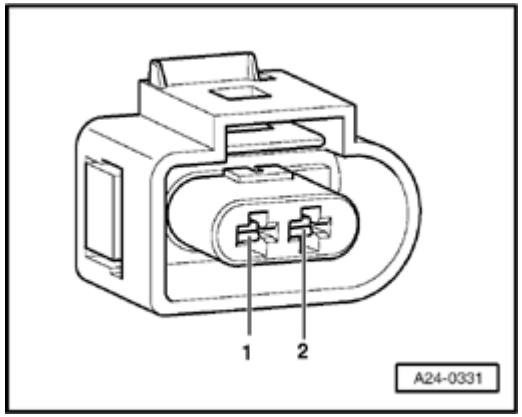

- Connect VAG1527B voltage tester to connector terminals 1 (B+) and 2.
- Initiate output DTM and activate Evaporative Emission (EVAP) canister purge regulator valve -N80- ⇒ Page 01-51 .
  - ♦ LED must blink.

cardiagn.com

If LED does not blink or if it remains constantly lit:

- Connect VAG1598/31 test box at wiring harness to Engine Control Module (ECM), do not connect ECM ⇒ Page 24-19 .

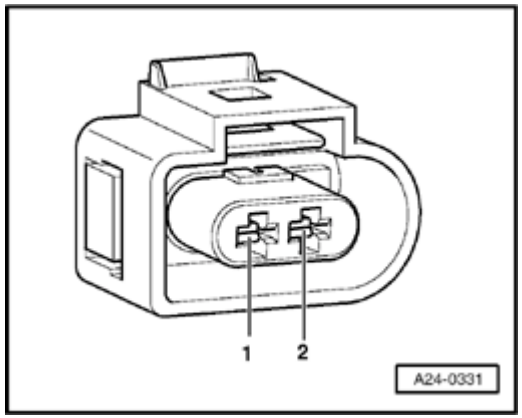

- Check the following wire connection for open circuit and short circuit to Ground (GND) and B+:

Harness connector Terminal	VAG1598/31 test box Socket
2	64

- Repair open circuit or short circuit if necessary.

If wire connection is OK:

- Replace Engine Control Module (ECM) ⇒ Page 24-22

cardiagn.com

24-120

Electronic engine power control (E-Gas), checking

E-Gas system, function

For E-Gas, the throttle valve is not operated by a cable from the accelerator pedal. There is no mechanical connection between the accelerator pedal and the throttle valve.

The position of the accelerator pedal is communicated to the Engine Control Module (ECM) via two sensors for accelerator pedal position (variable resistances; stored in one housing) that are connected with the accelerator pedal.

The accelerator pedal position (driver's intention) is a main input unit for the ECM.

Operation of the throttle valve occurs via an electric motor (throttle valve actuator) in the throttle valve control module. This is true across the entire engine speed and engine load spectrum.

The throttle valve is operated by the throttle valve actuator according to the instructions of the ECM.

With ignition switched on and engine off, the ECM activates the throttle valve actuator precisely according to the sensor for accelerator

cardiagn.com

pedal position. This means, if the accelerator pedal is depressed half way, the throttle valve actuator opens the throttle valve to the same degree; i.e. throttle valve would be opened half way.

cardiagn.com

24-121

With engine running (under load), the ECM can open or close the throttle valve independently of the sensor for accelerator pedal position.

This means, for example, that the throttle valve could be fully opened even though the accelerator pedal has only been depressed half way. This has the advantage of preventing torque losses at the throttle valve.

In addition to this, it results in significantly better values relative to emissions and consumption under certain load conditions.

The required engine torque can be achieved by the Engine Control Module (ECM) via the optimal combination of throttle valve diameter and boost pressure.

It would be incorrect to think that "E-Gas" consists of only one or two components. E-Gas is much more of a system containing all components that contribute to recognizing, controlling and monitoring the position of the throttle valve, e.g. sensor for accelerator pedal position, throttle valve control module, EPC warning lamp, Engine Control Module (ECM).

cardiagn.com

24-122

Electronic Power Control (EPC) warning lamp -K132- in instrument cluster

Note:

The Electronic Power Control (EPC) warning lamp -K132- is also called the EPC warning lamp.

"EPC" is an abbreviation and stands for Electronic Power Control (E-gas).

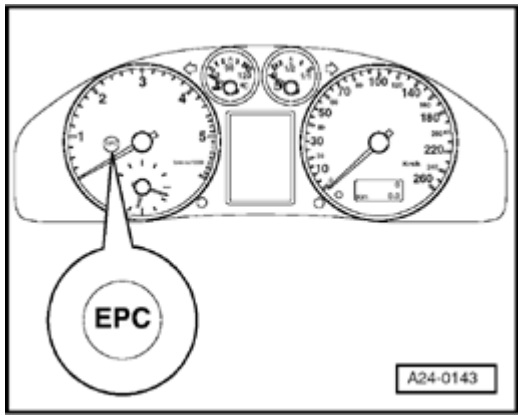

Installation location of EPC warning lamp

Engine Control Module (ECM) checks all components that are important for function of the E-Gas system after ignition is switched on.

The Engine Control Module (ECM) switches on the EPC warning lamp after ignition is switched on. Shortly after engine is started, the EPC warning lamp will go out. This requires, first of all, that the Engine Control Module (ECM) does not detect a malfunction in the E-gas system and, secondly, that activation of the lamp by the Engine Control Module (ECM) is OK.

If malfunctions are recognized in the E-Gas system during operation of the engine, the ECM switches on the EPC warning lamp in instrument cluster. (These malfunctions are listed in the DTC table). An entry is made in DTC memory at the same time.

cardiagn.com

24-123

Electronic Power Control (EPC) warning lamp -K132-, checking

Function test of warning lamp

- Switch ignition on.

  - Engine Control Module (ECM) switches EPC lamp on.

- Start engine.

  - Shortly after engine is started, the EPC warning lamp will go out if there are no malfunctions stored in DTC memory that relate to the E-gas system

Note:

The switch-on signal for Malfunction Indicator Lamp (MIL) is transferred from the Engine Control Module (ECM) to the instrument cluster via CAN-bus. Check data exchange between Engine Control Module (ECM) and other CAN capable control modules ⇒ *Page 24-178*

cardiagn.com

24-124

Throttle valve control module -J338-, checking

The following components are located in the housing for the throttle valve control module:

- Throttle drive (power accelerator actuation) -G186-. (This is an electric motor that is activated by the ECM. This electric motor opens the throttle valve against spring pressure.)
- Angle sensor -1- for throttle drive (power accelerator actuation) -G187-
- Angle sensor -2- for throttle drive (power accelerator actuation) -G188-

Notes:

- *The housing for the throttle valve control module must not be opened.*
- *The angle sensors are designed as potentiometers (variable resistances). They communicate the position of the throttle valve to the Engine Control Module (ECM) fully independent of each other.*
- *The potentiometers cannot be mechanically*

cardiagn.com

adjusted. Adjustments are performed in diagnostic function "04 - basic setting" using VAS5051 tester.

cardiagn.com

24-125

Throttle valve control module -J338-, adapting

The adaptation teaches the Engine Control Module (ECM) various positions of the throttle valve when the ignition is on and the engine is stopped. These positions are stored in the control module The return communication regarding the position of the throttle valve occurs via the two angle sensors for throttle drive.

An adaptation must always be performed when the throttle valve control module -J338- or the Engine Control Module (ECM) are removed and installed (or replaced) or if voltage supply to the Engine Control Module (ECM) is interrupted.

The learning process (adaptation) occurs:

- automatically if the ignition is switched on for at least 10 seconds without operating starter and accelerator pedal and the Engine Control Module (ECM) recognizes "adaptation required". (There will be no notification of whether adaptation was successful or not however). Adaptation required is recognized if stored voltage values from the angle sensors do not match actual measured voltage values within a certain tolerance range.

- via initiation of basic setting (function 04) display group 060 with ignition on.

cardiagn.com

24-126

Note:

Engine will not start during automatic adaptation.

Special Tools and Equipment

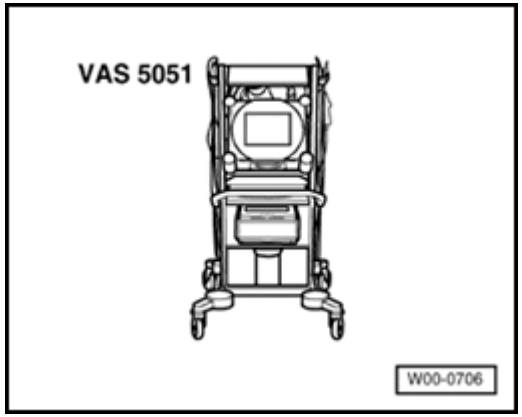

- VAS5051 with VAG5051/1

Requirements

- No DTCs in DTC memory, check DTC memory ⇒ Page 01-12 .
- Engine not running, ignition switched on.
- Accelerator pedal not depressed.
- Coolant temperature 10 to 95 °C.
- Intake air temperature 10 to 90 °C.
- Supply voltage for Engine Control Module (ECM) more than 12.7 volts; checking ⇒ Page 28-37 .

cardiagn.com

24-127

Procedure

- Connect VAS5051 tester ⇒ Page 01-7 and select vehicle system "01 - Engine electronics". Ignition must remain switched on for this.

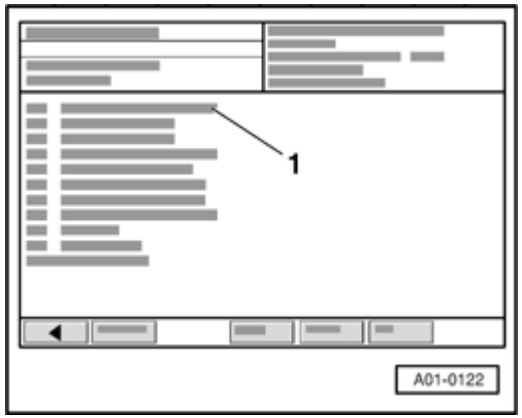

Display on VAS5051:

- In selection -1-, click on the diagnostic function "04 - Basic setting".

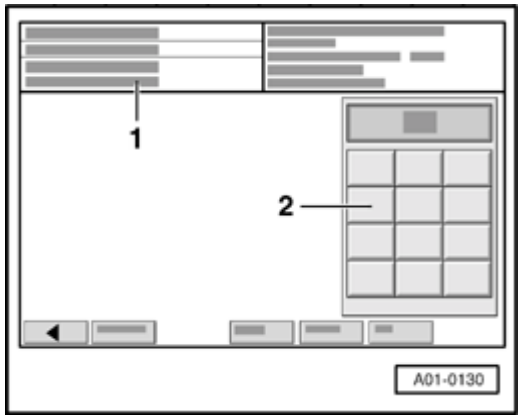

Display on VAS5051:

1 - Enter display group Max. input value = 255

- Select function "060" in button field -2- for "display group number 060" and press Q button to confirm input.

After pressing Q-button, throttle valve actuator will be switched on without current.

cardiagn.com

24-128

In this condition, the throttle valve will be drawn into an emergency position by a mechanical spring, which is located in the throttle valve control module. The values supplied by the two angle sensors in this emergency position are stored by the Engine Control Module (ECM).

Next, the throttle valve is opened by a certain value. If this value is reached, the throttle valve actuator is once again de-energized. Now, the mechanical spring must close the throttle valve to the previously learned emergency position within a specified time (spring test).

Then, the throttle valve is closed by the throttle valve actuator; the values supplied by the angle sensors in the throttle valve control unit are stored by the Engine Control Module (ECM).

If Engine Control Module (ECM) should de-energize throttle valve actuator during driving operation, this is expressed by an increased, surging idle speed (RPM). The engine accepts gas only after great delay.

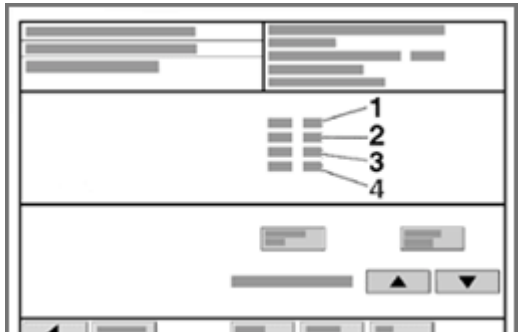

Display on VAS5051:

- Check specified values for throttle valve control module in display fields -3- and -4-.

cardiagn.com

24-129

	Display fields			
	1	2	3	4
Display group 060: Adaptation of throttle valve control module				
Display	xx %	xx %	**x**	**---**
Indicated	Throttle valve angle (angle sensor 1)	Throttle valve angle (angle sensor 2)	**Adaptation step counter**	**Adaptation condition**
Functional range			**0 to 8**	**ADP in progress** **ADP OK** **ERROR**
Specified value	3 to 93 %	97 to 3 %	**8**	**ADP OK**
Note			**After adaptation, the adaptation step counter reaches the number 8 (it is OK for numbers to be skipped).**	**If "ERROR." is displayed: Check DTC memory ⇒ Page 01-12 .** **If specified value is not obtained: ⇒Note, ⇒ Page 24-130**

Note:

The abbreviation "ADP" in display field 4 stands for "Adaptation".

cardiagn.com

24-130

Notes:

Note:

The control module can abort adaptation for the following reasons:

- *Throttle valve cannot be closed completely (e.g. contamination).*
- *Battery voltage is too low.*
- *Throttle valve control module or wire connection is faulty.*
- *Engine is started during adaptation or accelerator pedal is operated.*
- *Tension of throttle valve housing (check bolts).*

After termination, tester displays "Function is unknown or cannot be performed at the moment". The next time the ignition is switched on (several seconds), adaptation will be automatically repeated.

- End function "04 - Basic setting" by pressing ◀ button.

cardiagn.com

24-131

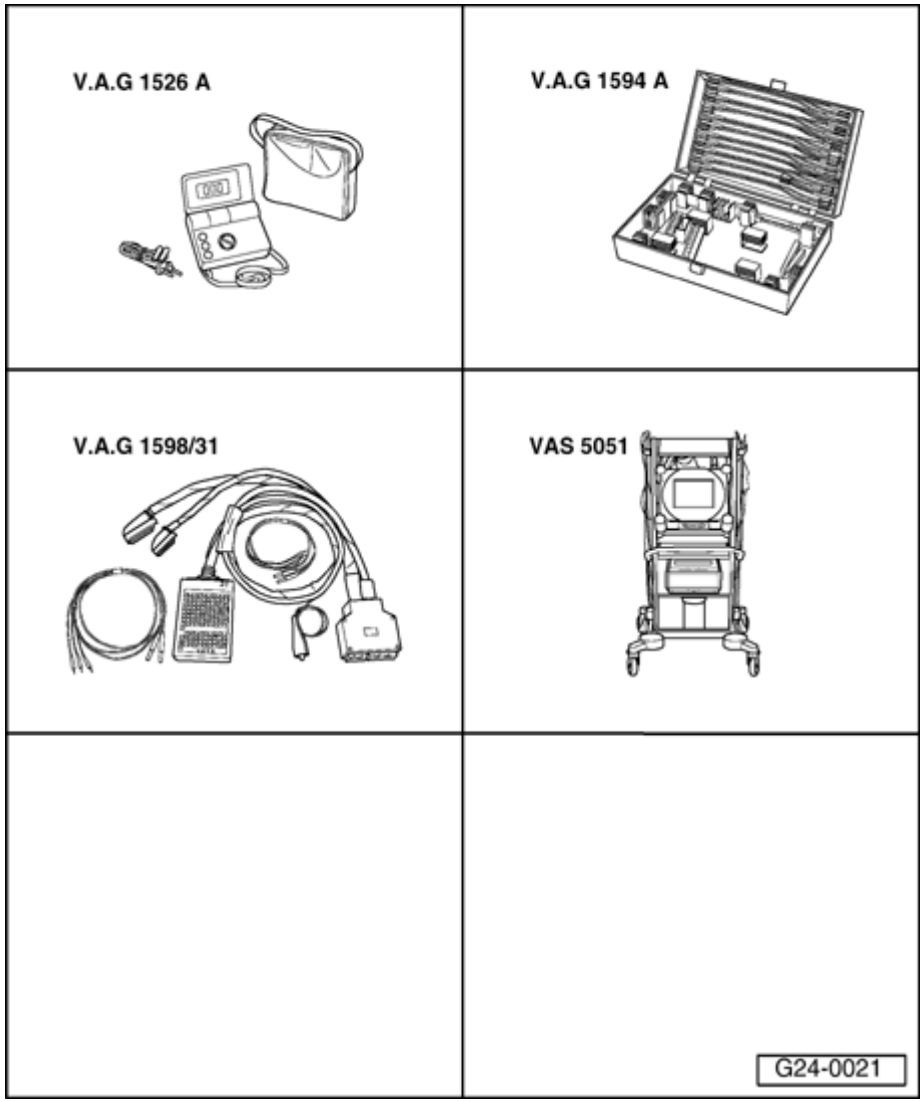

Angle sensor -1- for throttle drive, checking

Special Tools and Equipment

- VAG1526A
- VAG1594A
- VAG1598/31
- VAS5051 with VAG5051/1

cardiagn.com

24-132

Angle sensor 1 for throttle drive (power accelerator actuation) -G187- and angle sensor 1 for throttle drive (power accelerator actuation) -G188- inform the Engine Control Module (ECM) about the position of the throttle valve. Both angle sensors are located in the throttle valve control module.

Test sequence

- Connect VAS5051 tester ⇒ Page 01-7 and select vehicle system "01 - Engine electronics". Ignition must remain switched on for this.

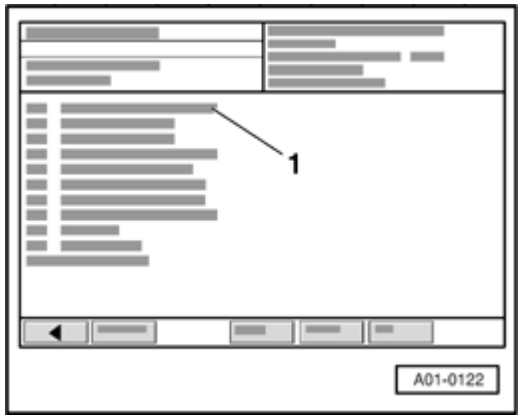

Display on VAS5051:

- Select diagnostic function "08 - Read Measuring Value Block" in selection -1-.

cardiagn.com

24-133

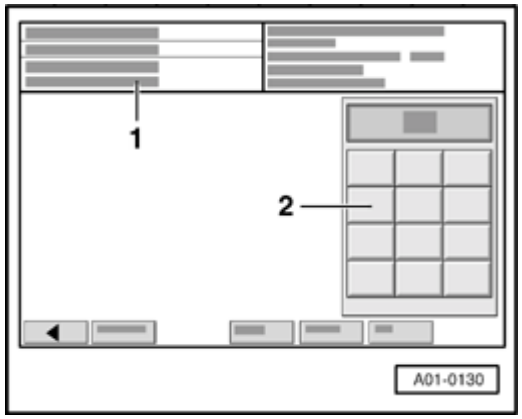

Display on VAS5051:

1 - Enter display group Max. input value = 255

- Select function "062" in button field -2- for "display group number 062" and press Q button to confirm input.

Display on VAS5051:

- Check specified values for E-gas potentiometer voltages in display fields -1- and -2-.

cardiagn.com

24-134

	Display fields			
	1	2	3	4
Display group 062: E-Gas potentiometer voltages				
Display	**xx %**	**xx %**	xx %	xx %
Indicated	**Throttle valve angle (angle sensor 1)**	**Throttle valve angle (angle sensor 2)**	Sensor 1 for Pedal position	Sensor 2 for Pedal position
Specified value	**3 to 93 %**	**97 to 3 %**	12 to 97 %	4 to 49 %

Note:

Engine Control Module (ECM) calculates the voltage values of the angle sensors in percent relative to 5 volts and displays these percentage values. (5 volts supply voltage represents 100 %).

- Observe display field 1 and 2.

- Slowly depress accelerator pedal completely.

Percent indication in display field 1 must rise uniformly. In the process, the tolerance range of 3 to 93% is not completely utilized.

Percent indication in display field 2 must decrease uniformly. The tolerance range 97 to 3 % is not used completely during this.

cardiagn.com

Notes:

- *The reason why the value indicated in display field 1 climbs, while the value indicated in display field 2 decreases, has to do with the fact that the potentiometers (angle sensors) in the throttle valve control unit run in opposite directions.*

- *This means that the voltage tap of angle sensor 1 runs from 0 to 5 volts. (The more the throttle valve is opened, the larger the voltage; percent indication climbs).*

- *The voltage tap of angle sensor 2 runs from 5 to 0 volts. (The more the throttle valve is opened, the lower the voltage; the percentage decreases).*

- Press "08 - erase DTC memory" to end function ◀ -button.

If indications do not resemble description:

- Check voltage supply and wire connections of throttle valve control module ⇒ Page 24-136 . Pay particular attention to harness connectors that could be loose or corroded.

cardiagn.com

- Check accelerator pedal position sensor ⇒ Page 24-138 .

cardiagn.com

24-136

Check voltage supply throttle valve control module

- Pull connector -2- off throttle valve control module.

- Switch ignition on.

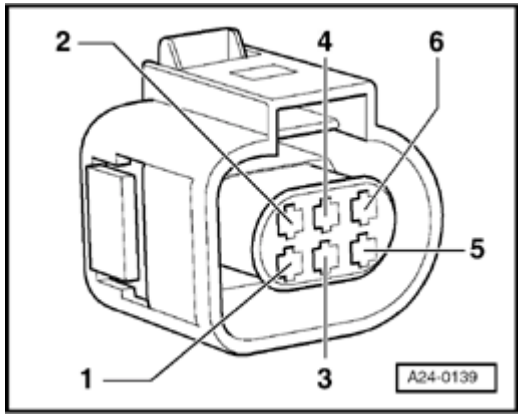

- Connect multimeter for voltage measurement as follows:

Harness connector Terminal	Specified value
2 + Ground (GND)	about 5 V
2 + 6	about 5 V

If specified values are not obtained:

- Check wire connections from Engine Control Module (ECM) to throttle valve control module ⇒ Page 24-137 .

cardiagn.com

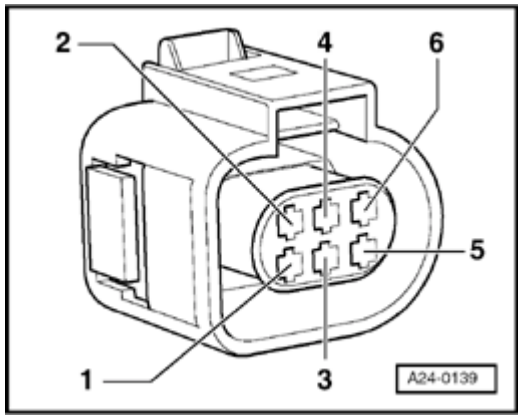

Checking wire connections

- Pull connector -2- off throttle valve control module.
- Connect VAG1598/31 test box at wiring harness to Engine Control Module (ECM), do not connect ECM ⇒ Page 24-19 .
- Check the following wire connections for open circuit and short circuit to Ground (GND) and B+:

Harness connector Terminal	VAG1598/31 test box Socket
1	92
2	83
3	117
4	84
5	118
6	91

- Repair open circuit or short circuit if necessary.

If no malfunctions are found in wires:

- Replace throttle valve control module.

cardiagn.com

24-138

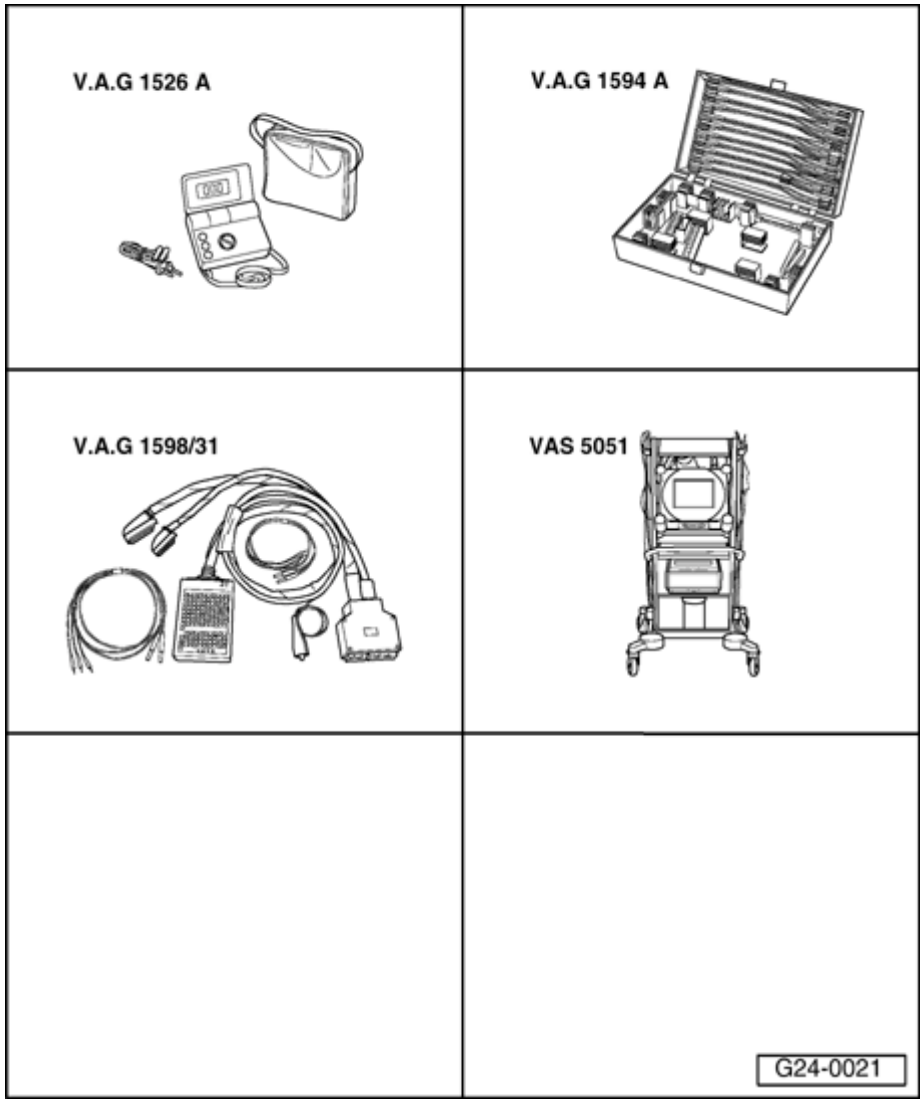

Throttle Position (TP) sensor, checking

Special Tools and Equipment

- VAG1526A
- VAG1594A
- VAG1598/31
- VAS5051 with VAG5051/1

cardiagn.com

24-139

Both the Throttle Position (TP) sensor -G79- and the Sender -2- for accelerator pedal position -G185- are located at the accelerator pedal and communicate the driver's intentions to the ECM completely independently of each other. Both sensors are stored in one housing.

Test sequence

- Connect VAS5051 tester ⇒ Page 01-7 and select vehicle system "01 - Engine electronics". Ignition must remain switched on for this.

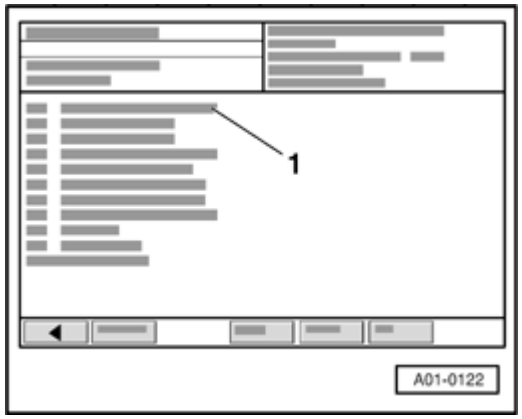

➢ Display on VAS5051:

- Select diagnostic function "08 - Read Measuring Value Block" in selection -1-.

cardiagn.com

24-140

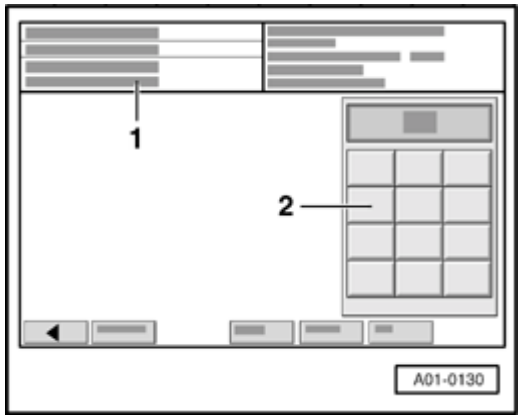

Display on VAS5051:

1 - Enter display group Max. input value = 255

- Select function "062" in button field -2- for "display group number 062" and press Q button to confirm input.

Display on VAS5051:

- Check specified values for E-gas potentiometer voltages in display fields -3- and -4-.

cardiagn.com

24-141

	Display fields			
	1	2	3	4
Display group 062: E-Gas potentiometer voltages				
Display	xx %	xx %	**xx %**	**xx %**
Indicated	Throttle valve angle (angle sensor 1)	Throttle valve angle (angle sensor 2)	**Sensor 1 for Pedal position**	**Sensor 2 for Pedal position**
Specified value	3 to 93 %	97 to 3 %	**12 to 97 %**	**4 to 49 %**

Note:

Engine Control Module (ECM) calculates the voltage values of the angle sensors in percent relative to 5 volts and displays these percentage values. (5 volts supply voltage represents 100 %).

- Observe display field 3 and 4.

- Slowly depress accelerator pedal completely.

Percent indication in display field 3 must rise uniformly. The tolerance range 12 to 97% is not used completely during this.

Percent indication in display field 4 must also rise uniformly. In the process, the tolerance range of 4 to 49% is not completely utilized.

cardiagn.com

24-142

Note:

The indicated value in display field 3 must always be about twice as large as the value in display field 4.

- Press "08 - erase DTC memory" to end function ◀ -button.

If indications do not resemble description:

- Check voltage supply and wire connections of sensor for accelerator pedal position ⇒ Page 24-143 .

cardiagn.com

24-143

Checking voltage supply of Throttle Position (TP) sensor

- Remove driver-side storage compartment.

⇒ *Repair Manual, Body Interior, Repair Group 68; Instrument panel; Driver-side storage compartment, removing*

- Disconnect harness connector for accelerator pedal position sensor.

- Switch ignition on.

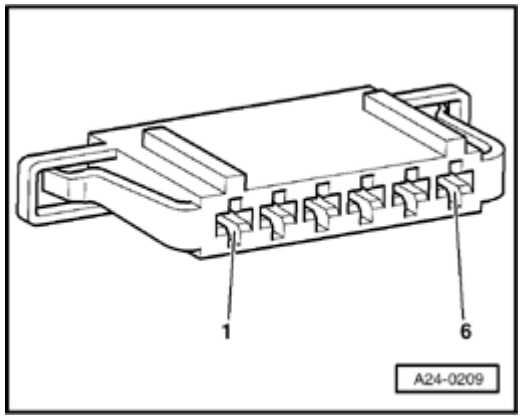

- Connect multimeter for voltage measurement as follows:

Harness connector Terminal	Specified value
1 + Ground (GND)	about 5 V
1 + 5	about 5 V
2 + Ground (GND)	about 5 V
2 + 3	about 5 V

If specified values are obtained:

cardiagn.com

- Also check signal wires.

If specified values are not obtained:

- Check wire connections from Engine Control Module (ECM) to sensors for accelerator pedal position.

cardiagn.com

Checking wire connections

- Connect VAG1598/31 test box at wiring harness to Engine Control Module (ECM), do not connect ECM ⇒ Page 24-19 .

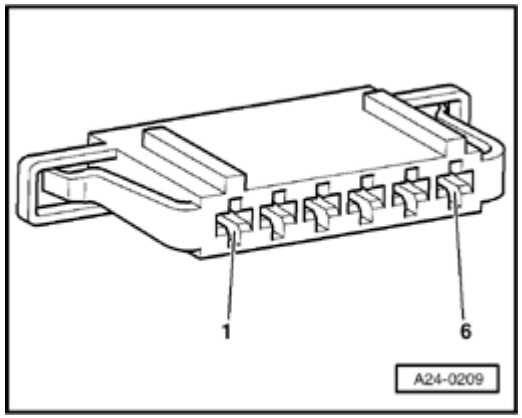

- Check the following wire connection for open circuit and short circuit to Ground (GND) and B+:

Harness connector Terminal	VAG1598/31 test box Socket
1	72
2	73
3	36
4	35
5	33
6	34

- Repair open circuit or short circuit if necessary.

If no malfunctions are found in wires:

- Replace accelerator pedal position sensor.

⇒ *Repair Manual, Fuel Supply System, Repair Group 20; Accelerator activation, servicing - front and all wheel drive*

cardiagn.com

24-145

Kick down function, adapting

If the sensor for accelerator pedal position or the Engine Control Module (ECM) is replaced on a vehicle with automatic transmission, the kick down function must be adapted.

Special Tools and Equipment

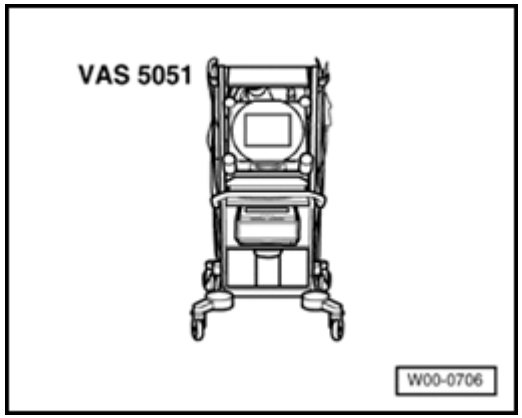

- VAS5051 with VAG5051/1

Requirements

- No DTCs in DTC memory, check DTC memory ⇒ Page 01-12 .
- Engine not running, ignition switched on.

Procedure

- Connect VAS5051 tester ⇒ Page 01-7 and select vehicle system "01 - Engine electronics". Ignition must remain switched on for this.

cardiagn.com

24-146

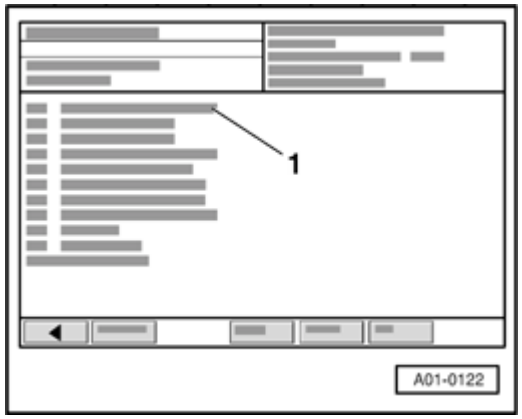

Display on VAS5051:

- In selection -1-, click on the diagnostic function "04 - Basic setting".

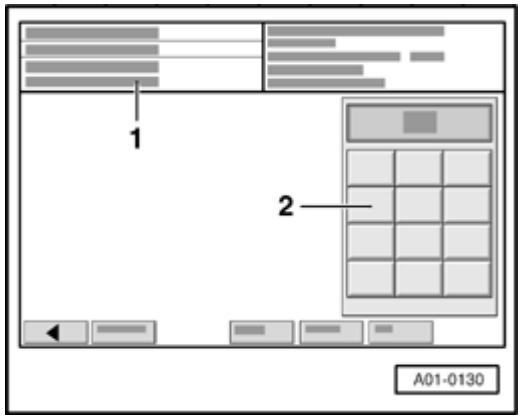

Display on VAS5051:

1 - Enter display group Max. input value = 255

- Select function "063" in button field -2- for "display group number 063" and press Q button to confirm input.

cardiagn.com

24-147

Display on VAS5051:

Note:

There will be a prompt: "Operate kickdown".

- Depress accelerator pedal completely, past kick down point, and hold down.

Note:

During adaptation of the kick down point, "Kick down ADP in progress" will be indicated in display. After successful adaptation of the kick down point, "Kick down ADP OK" will be indicated on display.

- Check specified value in display field -4-.

cardiagn.com

24-148

	Display fields			
	1	2	3	4
Display group 063: Kick down function, adapting				
Display	xx %	xx %	**Kick down**	**---**
Indicated	Sensor 1 for Pedal position	learned kick down value for Throttle Position (TP) sensor	**Kick down**	**Adaptation condition**
Functional range			**Kick down**	**operate** **ADP in progress** **ADP OK** **ERROR**
Specified value	79 to 94 %	79 to 94 %	**Kick down**	**ADP OK**
Note				**If "ERROR." is displayed: Check DTC memory ⇒ Page 01-12 .**

Notes:

- *The abbreviation "ADP" in display field 4 stands for Adaptation.*
- *"ERROR" can be indicated, for example, if the accelerator pedal is not immediately pressed in response to a request by*

cardiagn.com

the tester or if the accelerator pedal is released while adaptation is running despite the fact that adaptation is not yet complete. In both cases, "Basic Setting" must be exited and the adaptation must be performed again ⇒ *Page 24-145* .

If specified value "ADP OK" is obtained:

- End function "04 - Basic setting" by pressing ◀ button.

cardiagn.com

24-149

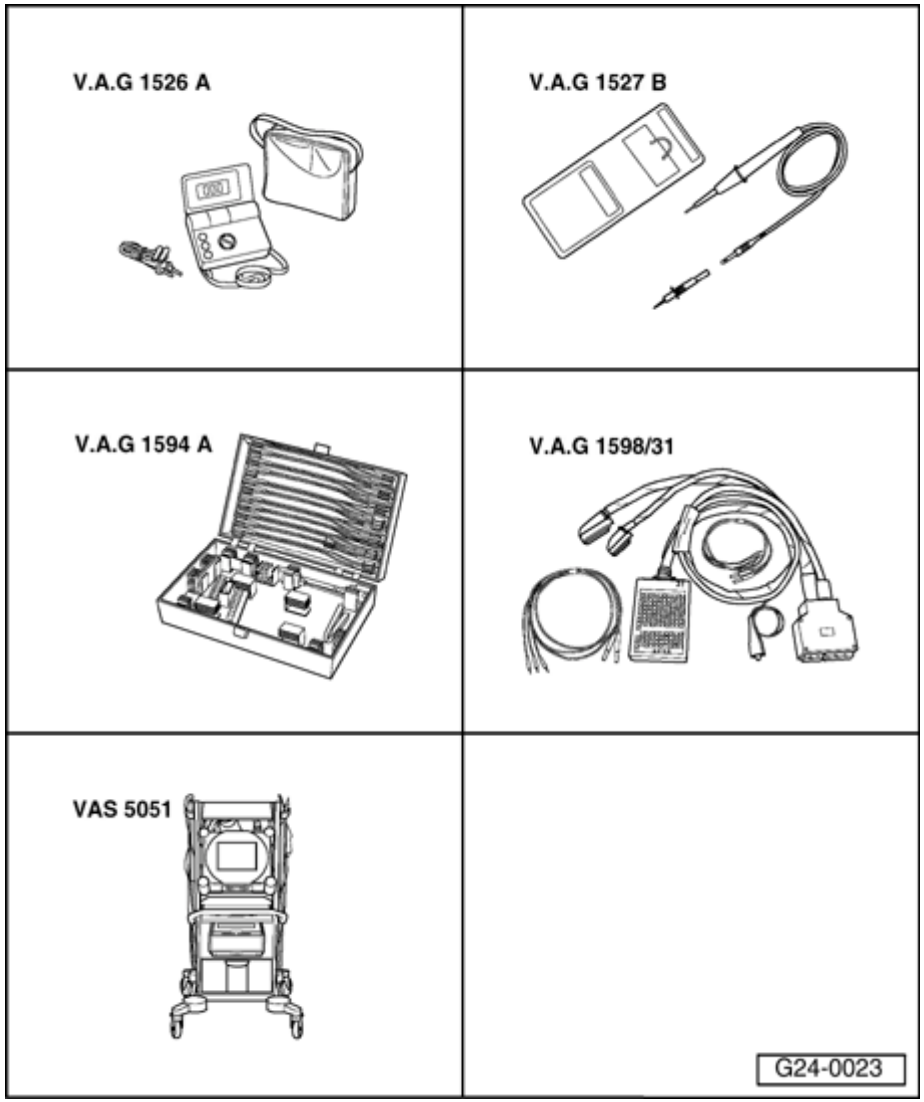

Brake light switch and brake pedal switch, checking

Special Tools and Equipment

- VAG1526A
- VAG1527B
- VAG1594A
- VAG1598/31
- VAS5051 with VAG5051/1

cardiagn.com

24-150

Note:

For safety reasons, the instruction from the accelerator pedal sensor (potentiometer) to the ECM to open the throttle valve is suppressed when brake is being operated. This requires the brake light switch signal and also the brake pedal switch signal in the control module. If brake pedal is operated with accelerator pedal constantly depressed, engine is immediately regulated down to idle speed. A faulty switch can lead to undesired regulation.

Test sequence

- Connect VAS5051 tester ⇒ Page 01-7 and select vehicle system "01 - Engine electronics". Ignition must remain switched on for this.

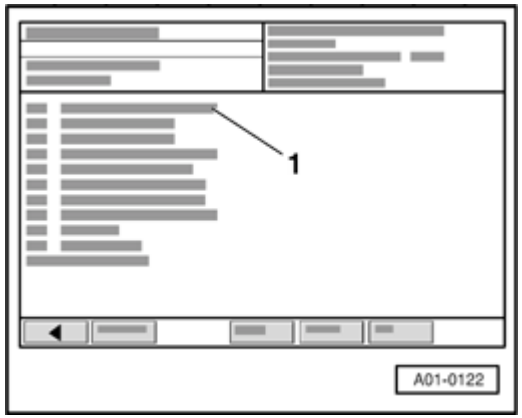

➢ Display on VAS5051:

- Select diagnostic function "08 - Read Measuring Value Block" in selection -1-.

cardiagn.com

24-151

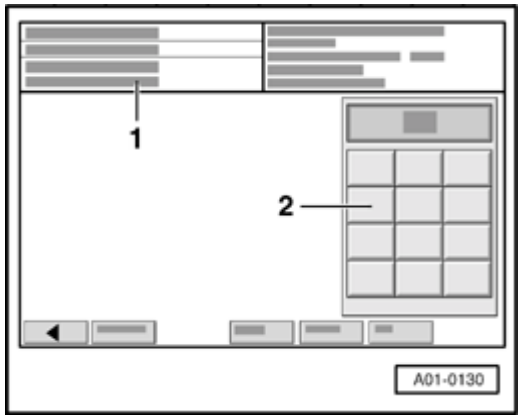

Display on VAS5051:

1 - Enter display group Max. input value = 255

- Select function "066" in button field -2- for "Display group number 066" and press Q button to confirm input.

Display on VAS5051:

- Check brake light switch/brake pedal switch in display field -2-.

cardiagn.com

24-152

	Display fields			
	1	2	3	4
Display group 066: Signals to Engine Control Module (ECM)				
Display	xxx km/h	**XXXXXXXX**	xxx km/h	XXXXXXXX
Indicated	ACTUAL speed	**Switch positions**	SPECIFIED speed	Switch positions
Functional range		**XXXXXX00** **XXXXXX11**		
Specified value		• Pedal not depressed: **XXXXXX00**		
		• Pedal depressed: **XXXXXX11**		
Note		**Value:X = no significance.** **Switch points slightly offset**		

- Press "08 - erase DTC memory" to end function ◀ -button.

cardiagn.com

24-153

If indications do not resemble description:

Check switch

- Remove driver-side storage compartment.

⇒ *Repair Manual, Body Interior, Repair Group 68; Instrument panel; Driver-side storage compartment, removing*

- Disconnect harness connector at brake light switch and brake pedal switch.

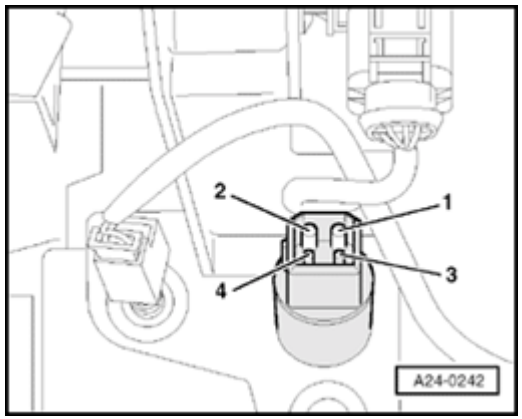

- Connect multimeter between terminal 1 and 2 for resistance measurement.
  - ♦ Specification: ∞ Ω (no continuity)
- Depress accelerator pedal.
  - ♦ Specification: approx. 0 Ω
- Connect multimeter between terminal 3 and 4 for resistance measurement.
  - ♦ Specification: approx. 0 Ω
- Depress accelerator pedal.
  - ♦ Specification: ∞ Ω (no continuity)

If specified values are not obtained:

cardiagn.com

- Replace brake light switch / brake pedal switch.

cardiagn.com

24-154

If specified values are obtained:

- Check voltage supply

Checking voltage supply

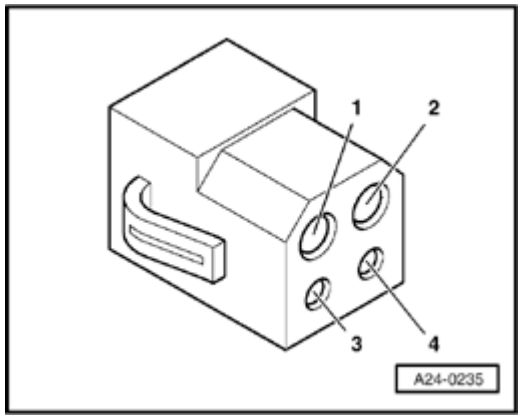

- Connect VAG1527B voltage tester as follows:

Harness connector Terminal	Measure to
1	Chassis Ground (GND)

♦ LED must light up.

Harness connector Terminal	Measure to
3	Chassis Ground (GND)

- Switch ignition on.

♦ LED must light up.

If LED does not light up:

- Check wire connection from terminal 1 or 3 of connector for open circuit and short circuit to Ground (GND):

⇒ *Electrical Wiring Diagrams, Troubleshooting & Component Locations*

cardiagn.com

- Repair open circuit or short circuit if necessary.

If LED lights up:

- Checking activation.

Checking activation

- Connect VAG1598/31 test box at wiring harness to Engine Control Module (ECM), do not connect ECM ⇒ Page 24-19 .

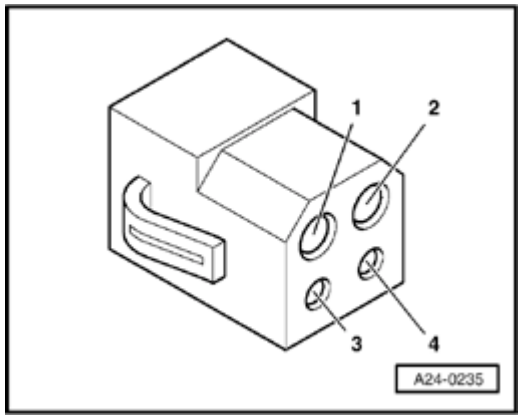

- Check the following wire connections for open circuit and short circuit to Ground (GND) and B+:

Harness connector Terminal	VAG1598/31 test box Socket
2	56
4	55

- Repair open circuit or short circuit if necessary.

cardiagn.com

24-156

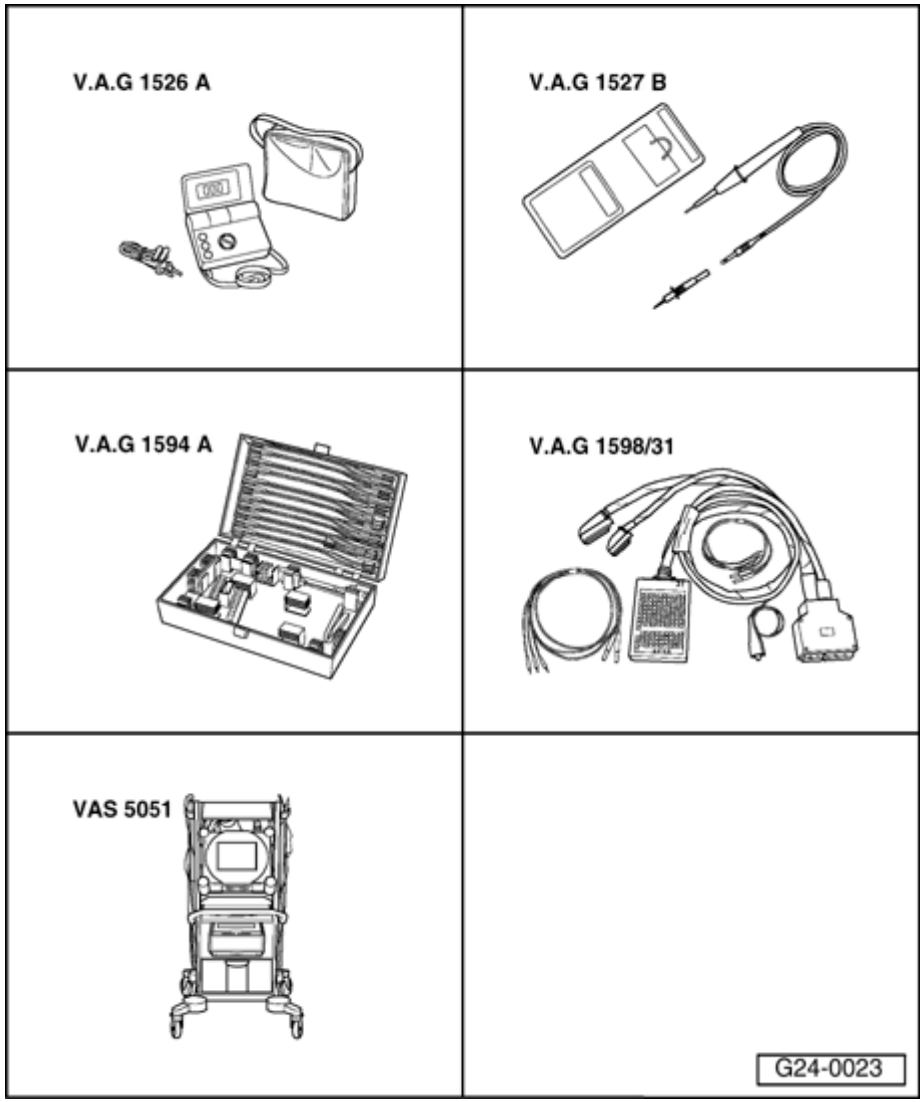

Clutch vacuum vent valve switch -F36-, checking

Special Tools and Equipment

- VAG1526A
- VAG1527B
- VAG1594A
- VAG1598/31
- VAS5051 with VAG5051/1

cardiagn.com

24-157

Note:

This signal helps prevent excessive RPM oscillations and tip-in shocks when clutch is disengaged and is required for the cruise control system.

Test sequence

- Connect VAS5051 tester ⇒ Page 01-7 and select vehicle system "01 - Engine electronics". Ignition must remain switched on for this.

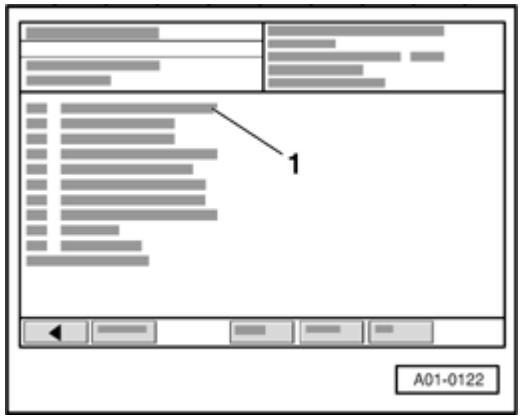

➢ Display on VAS5051:

- Select diagnostic function "08 - Read Measuring Value Block" in selection -1-.

cardiagn.com

24-158

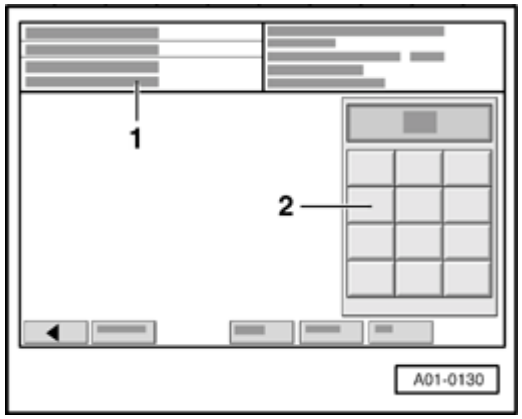

Display on VAS5051:

1 - Enter display group Max. input value = 255

- Select function "066" in button field -2- for "Display group number 066" and press Q button to confirm input.

Display on VAS5051:

- Check Clutch Pedal Position (CPP) switch in display field -2.

cardiagn.com

24-159

	Display fields			
	1	2	3	4
Display group 066: Signals to Engine Control Module (ECM)				
Display	xxx km/h	**XXXXXXXX**	xxx km/h	XXXXXXXX
Indicated	ACTUAL speed	**Switch positions**	SPECIFIED speed	Switch positions
Functional range		**XXXXX0XX** **XXXXX1XX**		
Specified value		• Pedal not depressed: **XXXXX0XX**		
		• Pedal depressed: **XXXXX1XX**		
Note		**Value:X = no significance**		

- Press "08 - erase DTC memory" to end function ◀-button.

cardiagn.com

24-160

If indications do not resemble description:

Check switch

- Remove driver-side storage compartment.

⇒ *Repair Manual, Body Interior, Repair Group 68; Instrument panel; Driver-side storage compartment, removing*

- Disconnect harness connector at Clutch Pedal Position (CPP) switch.

- Connect multimeter between terminal 1 and 2 for resistance measurement.

  ♦ Specification: approx. 0 Ω

- Depress clutch pedal.

  ♦ Specification: ∞ Ω (no continuity)

If specified value is not obtained:

- Replace Clutch Pedal Position (CPP) switch.

If specified value is obtained:

cardiagn.com

- Check voltage supply

cardiagn.com

24-161

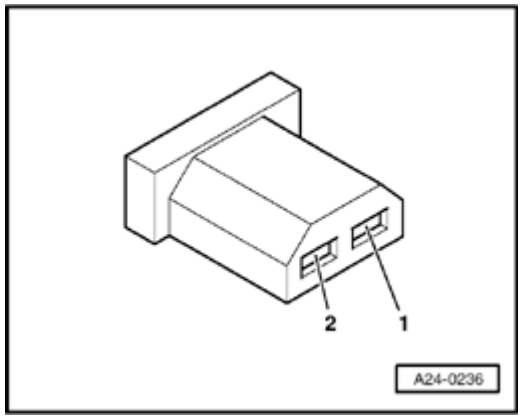

Checking voltage supply

- Connect VAG1527B voltage tester as follows:

Harness connector Terminal	Measure to
1	Chassis Ground (GND)

- Switch ignition on.
  - ♦ LED must light up.

If LED does not light up:

- Check wire connection from terminal 1 of connector to fuse for open circuit:

⇒ *Electrical Wiring Diagrams, Troubleshooting & Component Locations*

- Repair open circuit if necessary.

If LED lights up:

- Checking activation.

cardiagn.com

Checking activation

- Connect VAG1598/31 test box at wiring harness to Engine Control Module (ECM), do not connect ECM ⇒ Page 24-19 .

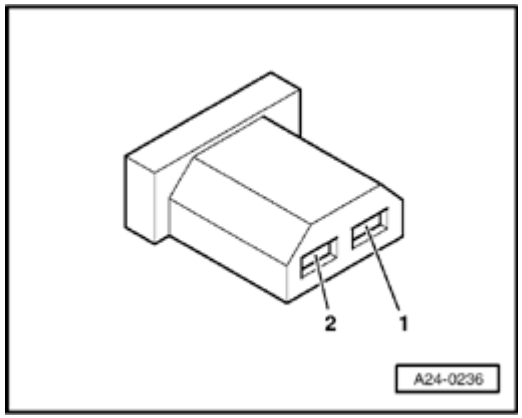

- Check the following wire connection for open circuit and short circuit to Ground (GND) and B+:

Harness connector Terminal	VAG1598/31 test box Socket
2	39

- Repair open circuit or short circuit if necessary.

cardiagn.com

24-163

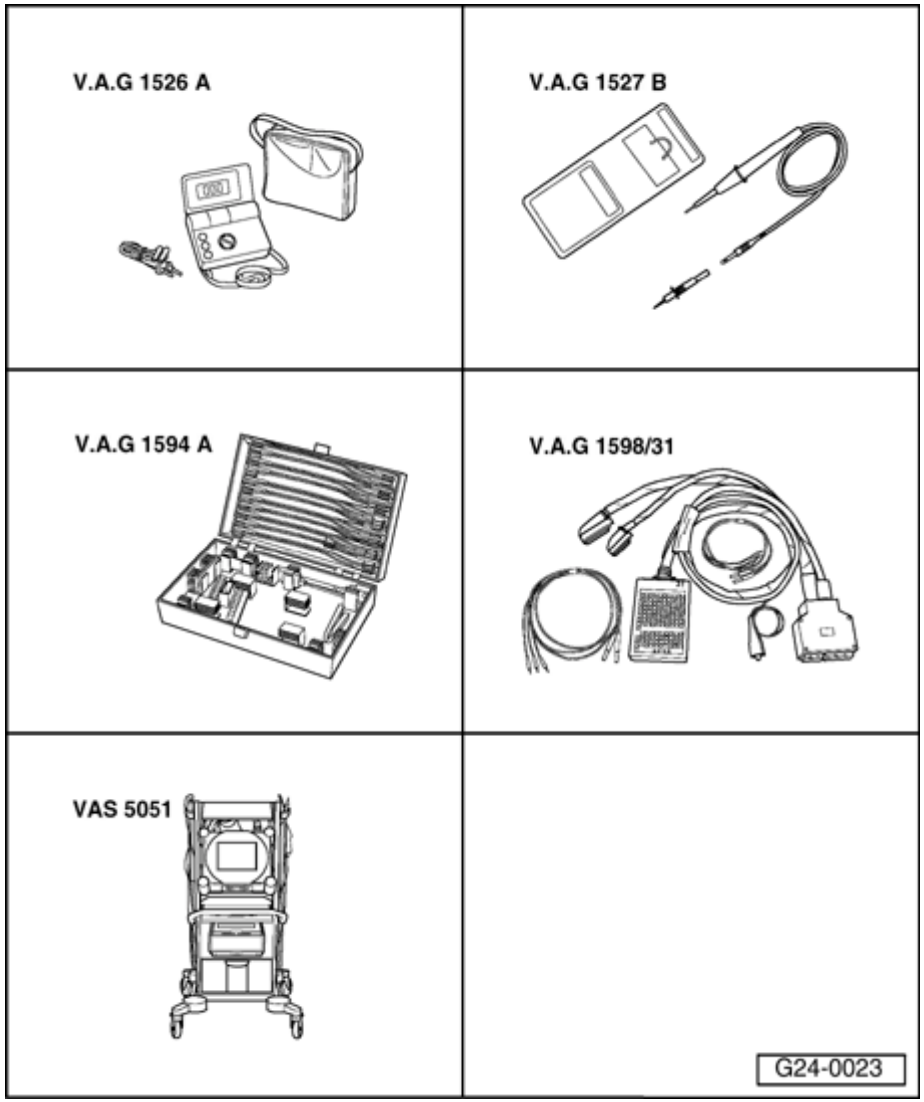

Additional signals, checking

Special Tools and Equipment

- VAG1526A
- VAG1527B
- VAG1594A
- VAG1598/31
- VAS5051 with VAG5051/1

cardiagn.com

Engine speed signal, checking

Note:

The engine speed signal is output at terminal 37 of the Engine Control Module (ECM). The signal is used, among other things, for RPM display in the instrument cluster.

- Connect VAG1598/31 test box at wiring harness to Engine Control Module (ECM), do not connect ECM ⇒ Page 24-19 .

- Check the following wire connection for open circuit and short circuit to Ground (GND) and B+:

Test box VAG1598/31 Socket	Instrument cluster Terminal
37	⇒ *Electrical Wiring Diagrams, Troubleshooting & Component Locations*

- Repair open circuit or short circuit if necessary.

cardiagn.com

24-165

Vehicle speed signal, checking

Notes:

- *The vehicle speed signal is generated by the speedometer Vehicle Speed Sensor (VSS) - G22- (at transmission) and is processed in the instrument cluster.*
- *The processed signal enters at terminal 54 of the ECM and is used for idle stabilization and tip-in shock reduction during shifting.*

Test requirement:

- Function and display of speedometer OK.

Troubleshooting:

⇒ *Repair Manual, Electrical Equipment, Repair Group 90; Instrument cluster; Speed signal, checking*

Test sequence

WARNING!

To reduce the risk of accident during road tests, always observe safety precautions ⇒ ***Page 24-1*** .

cardiagn.com

- Connect VAS5051 tester ⇒ Page 01-7 and select vehicle system "01 - Engine electronics". Engine must run at idle for this.

cardiagn.com

24-166

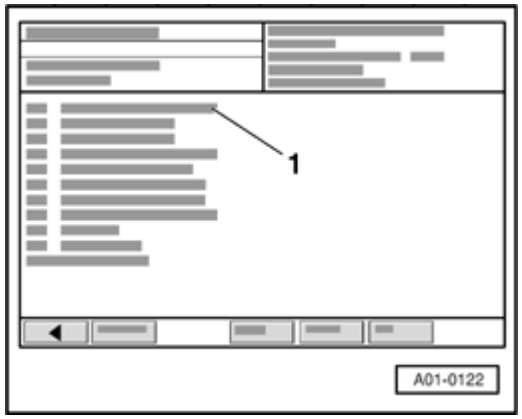

Display on VAS5051:

- Select diagnostic function "08 - Read Measuring Value Block" in selection -1-.

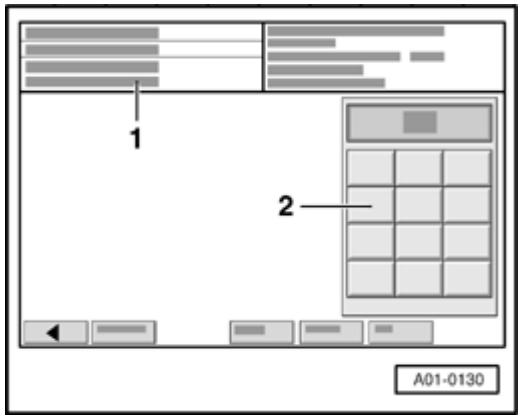

Display on VAS5051:

1 - Enter display group Max. input value = 255

- Select function "005" in button field -2- for "display group number 005" and press Q button to confirm input.

cardiagn.com

24-167

Display on VAS5051:

- Determining via road test whether vehicle speed is displayed in display field -3-.
- If vehicle speed is not display, lift vehicle -if possible using a vehicle lift- until front left wheel is free.
- Connect VAG1598/31 test box at wiring harness to Engine Control Module (ECM), do not connect ECM ⇒ Page 24-19 .
- Connect VAG1527B voltage tester to sockets 3 (B+) and 54 (VSS) of VAG1598/31 test box.
- Switch ignition on and turn front left wheel by hand.
  - ♦ LED must blink (very brief blink signal).

cardiagn.com

24-168

If LED does not blink:

- Check the following wire connection for open circuit and short circuit to Ground (GND) and B+:

Test box VAG1598/31 Socket	Instrument cluster Terminal
54	⇒ *Electrical Wiring Diagrams, Troubleshooting & Component Locations*

- Repair open circuit or short circuit if necessary.

cardiagn.com

24-169

A/C compressor shut-off, checking

Notes:

- *The A/C compressor signal communicates to the ECM that the compressor will be switched on in 140 ms.*
- *The Engine Control Module (ECM) can switch off the A/C compressor via the same wire connection.*
- *Engine Control Module (ECM) switches off A/C compressor:*

  - - during hard acceleration (Wide Open Throttle 1st gear)

  - - in emergency mode (emergency operation)

  - - after initiating basic setting (function 04)

cardiagn.com

24-170

Test requirements:

- A/C system OK
- No DTCs in DTC memory of Engine Control Module (ECM).
- Vehicle at room temperature (warmer than +15 °C).

Test sequence

- Connect VAS5051 tester ⇒ Page 01-7 and select vehicle system "01 - Engine electronics". Engine must run at idle for this.

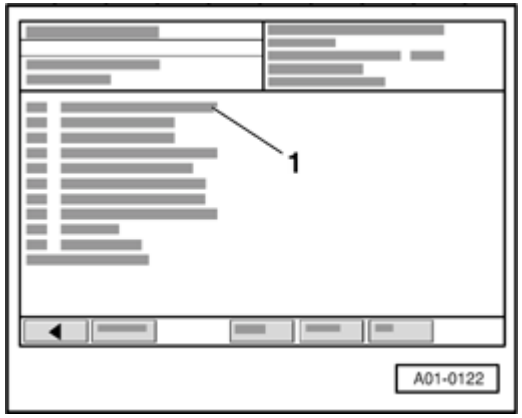

➢ Display on VAS5051:

- Select diagnostic function "08 - Read Measuring Value Block" in selection -1-.

cardiagn.com

24-171

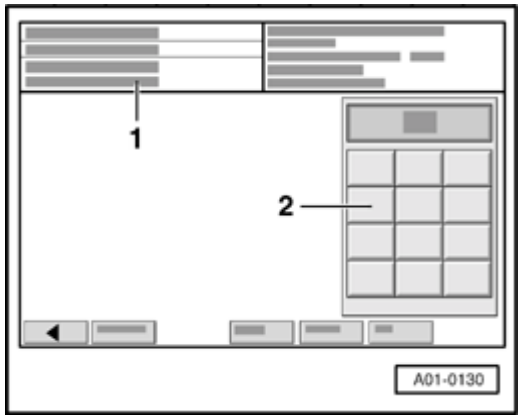

Display on VAS5051:

1 - Enter display group Max. input value = 255

- Select function "050" in button field -2- for "display group number 050" and press Q button to confirm input.

Display on VAS5051:

- Switch A/C system off.
  - Specified value in display field -4-: Compr. OFF
- Switch A/C system on using "Auto" button and adjust A/C system to maximum cooling or heating power. Compressor must run.
  - Specified value in display field -4-: Compr. ON
- Depress gas pedal completely (swiftly) and then release it (brief acceleration).

cardiagn.com

24-172

Display on VAS5051:

- Specified value in display field -4-: Indication jumps for a few seconds from "Compr. ON" to "Compr. OFF" (compressor is switched off when vehicle accelerates).

If indications do not resemble description:

- Connect VAG1598/31 test box at wiring harness to Engine Control Module (ECM), do not connect ECM ⇒ Page 24-19 .
- Check the following wire connection for open circuit and short circuit to Ground (GND) and B+:

Test box VAG1598/31 Socket	A/C control head -E87- Terminal
41	⇒ *Electrical Wiring Diagrams, Troubleshooting & Component Locations*

- Repair open circuit or short circuit if necessary.
- If there are no malfunctions in the wiring, check function of A/C system.

⇒ *Repair Manual, Heating & Air Conditioning, Repair Group 01; On Board Diagnostic (OBD) of A/C system*

cardiagn.com

24-173

Wire for crash signal, checking

The Engine Control Module (ECM) receives the crash signal ("Crash shut-off was triggered") from the airbag control module.

When the airbag control module sends the crash signal to the ECM (during an accident or when output DTM is being performed for the airbag system), the ECM switches the Fuel Pump (FP) off. This means that the engine will stop running but can be started again afterward (e.g. to remove vehicle from danger).

- Connect VAG1598/31 test box at wiring harness to Engine Control Module (ECM), do not connect ECM ⇒ Page 24-19 .

- Check the following wire connection for open circuit and short circuit to Ground (GND) and B+:

Test box VAG1598/31 Socket	Control module for Airbag -J234- Terminal
67	⇒ *Electrical Wiring Diagrams, Troubleshooting & Component Locations*

cardiagn.com

24-174

- Repair open circuit or short circuit if necessary.

⇒ *Electrical Wiring Diagrams, Troubleshooting & Component Locations*

If no malfunctions are found in wire:

- Check DTC memory of control module for airbag:

⇒ *Repair Manual, Body On Board Diagnostic (OBD), Repair Group 01; On Board Diagnostic (OBD) of airbag system BAE (basic trigger unit) with side airbag; DTC memory, checking*

cardiagn.com

24-175

Consumption signal for board computer, checking

Note:

The consumption signal is transferred from the Engine Control Module (ECM) to the instrument cluster via CAN-bus. Check data exchange between Engine Control Module (ECM) and other CAN capable control modules ⇒ *Page 24-178*

cardiagn.com

24-176

Wire for fuel level signal, checking

Notes:

- *The signal helps with cause localization when certain malfunctions are recognized (e.g. combustion misfires).*

- *The fuel level signal is transferred from the instrument cluster to the Engine Control Module (ECM) via CAN-bus. Check data exchange between Engine Control Module (ECM) and other CAN capable control modules* ⇒ *Page 24-178*

cardiagn.com

24-177

Signal for rough terrain recognition, checking

Notes:

- *When the ABS/EDL control module recognizes that a wheel is spinning, the ABS/EDL control module generates the rough terrain signal. When the Engine Control Module (ECM) recognizes the rough terrain signal, combustion misfire recognition is switched off in the Engine Control Module (ECM).*

- *Only check the rough terrain signal if the malfunction "18014 (P1606) rough terrain info/engine torque from ABS cont. mod. Electrical malfunction in circuit" is stored DTC memory. It is possible that the malfunction "Combustion misfire" is also stored in DTC memory as a side effect and it can be disregarded.*

- *The rough terrain signal is transferred from the ABS/EDL control module to the Engine Control Module (ECM) via CAN-bus. Check data exchange between Engine Control Module (ECM) and other CAN capable control modules* ⇒ *Page 24-178*

cardiagn.com

24-178

Data transfer between Engine Control Module (ECM) and CAN-bus capable control modules, checking

Notes:

- *Data exchange between individual control modules occurs via a bus system.*
- *The term "CAN-bus" refers to a system that transports and distributes data.*
- *The wire connections between the control modules, via which data is transferred, are referred to as data wires.*
- *Data is transferred to the connected control modules serially (one after the other) via these data wires (i.e. engine speed, accelerator position).*

Checking bus system

The DTC table suggested checking the data exchange between the Engine Control Module (ECM) and CAN capable control modules.

- Connect VAS5051 tester ⇒ Page 01-7 and select vehicle system "01 - Engine electronics". Ignition must remain switched on for this.

cardiagn.com

24-179

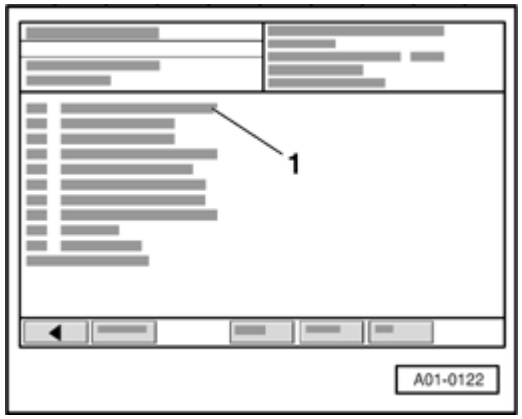

Display on VAS5051:

- Select diagnostic function "08 - Read Measuring Value Block" in selection -1-.

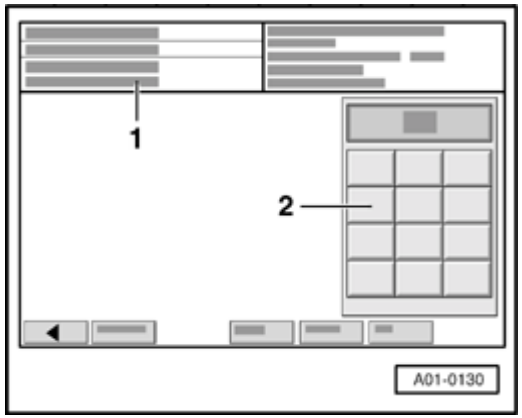

Display on VAS5051:

1 - Enter display group Max. input value = 255

Note:

Measuring value blocks 125 and 126 indicate the participants in the powertrain data-BUS.

- Select function "125" in button field -2- for "display group number 125" and press Q button to confirm input.

cardiagn.com

24-180

➢ Display on VAS5051:

- Check indications in display fields -1- through -4-.

  CAN capable control modules connected to the Engine Control Module (ECM) are indicated:

  - ♦ No indication: Control module not CAN-capable
  - ♦ Indication 1: CAN capable control module is connected to databus
  - ♦ Indication 0: CAN capable control module is not connected to databus
- Press ▲ button to change into display group 126.
- Check under display group 126 in the same manner.
- Press "08 - erase DTC memory" to end function ◀ -button.

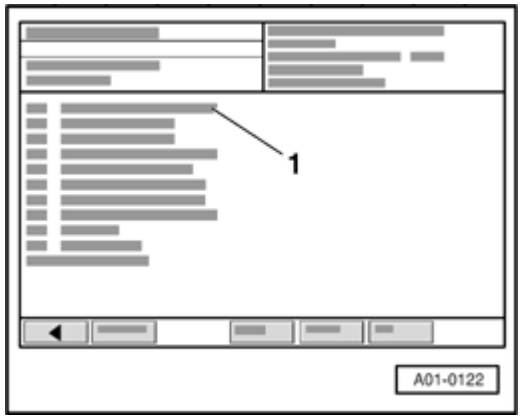

➢ Display on VAS5051:

- Select diagnostic function "06 - end output" in selection -1-.

cardiagn.com

24-181

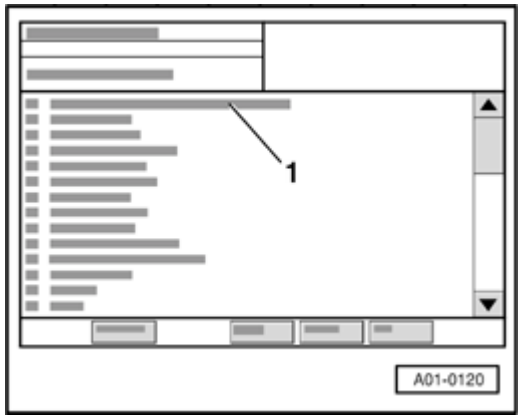

Display on VAS5051:

- In selection -1-, press diagnostic function "00 - Check DTC memory - complete system".
  - DTC memory of all OBD capable systems in the vehicle will be checked.

When a control module responds with its identification, the display indicates the number of stored errors or indicates "no malfunctions recognized".

DTCs stored in the system are indicated in sequence and printed out. Then the VAG1551 scan tool sends the next address word.

If a malfunction related to the"powertrain databus" or the "CAN-bus" is indicated:

- Check whether the Engine Control Module (ECM) and other CAN capable control modules installed are appropriate for this vehicle (part no. and coding).

If the correct control modules are installed:

- Check to be sure the multi-pin connectors of the control modules are securely connected.

cardiagn.com

24-182

If multi-pin connectors are properly secured:

- Check CAN bus system

Checking a "two-line bus system"

Three or more control modules are communicating across a "two-line bus system".

- Analyze the DTCs stored in the memories of the control modules.

Note:

This analysis will help you locate the cause of the line malfunction.

cardiagn.com

24-183

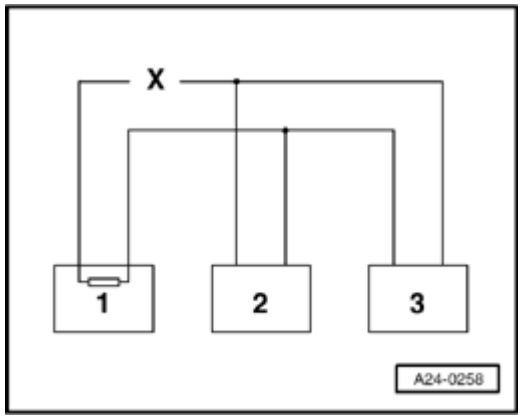

Example 1:

From the DTCs stored in the memories, you have determined that control module 1 is not communicating with control modules 2 and 3.

Control module	DTCs stored in DTC memories:
1	♦ Missing signal from control module 2 ♦ Missing signal from control module 3
2	♦ Missing signal from control module 1
3	♦ Missing signal from control module 1

- Switch ignition off.
- Disconnect the control modules connected across the bus wires and check the bus wires for an open circuit.

⇒ *Electrical Wiring Diagrams, Troubleshooting & Component Locations*

- Replace control module 1 if no malfunctions can be found in the bus wires.

cardiagn.com

24-184

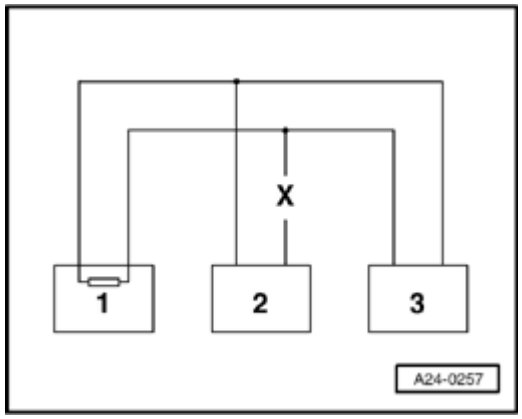

Example 2:

From the DTCs stored in the memories, you have determined that control module 2 is not communicating with control modules 1 and 3.

Control module	DTCs stored in DTC memories:
1	♦ Missing signal from control module 2
2	♦ Missing signal from control module 1 ♦ Missing signal from control module 3
3	♦ Missing signal from control module 2

- Switch ignition off.
- Disconnect the control modules connected across the bus wires and check the bus wires for an open circuit.

⇒ *Electrical Wiring Diagrams, Troubleshooting & Component Locations*

- Replace control module 2 if no malfunctions can be found in the bus wires.

cardiagn.com

24-185

Example 3:

Using the DTCs stored in the memories, you have determined that none of the control modules are sending or receiving signals.

Control module	DTCs stored in DTC memories:
1	♦ Powertrain CAN-bus faulty
2	♦ Powertrain CAN-bus faulty
3	♦ Powertrain CAN-bus faulty

- Switch ignition off.

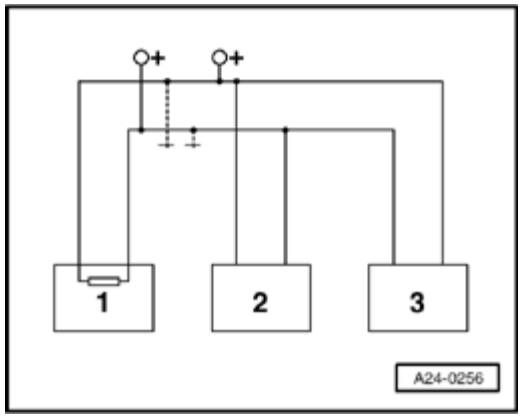

- Disconnect the control modules connected across the bus wires and check bus wires for a short circuit to B+ and Ground (GND).

⇒ *Electrical Wiring Diagrams, Troubleshooting & Component Locations*

cardiagn.com

24-186

If you cannot determine a cause for the DTC "Powertrain CAN-bus malfunction, check whether the DTC is caused by one of the control modules.

All control modules that use the CAN-bus are still disconnected. Ignition is switched off.

- Connect one of the control modules.
- Connect VAG 1551 scan tool. Switch ignition on, and erase the DTC memory of the control module you just connected. End scan tool output using the "End Output" function 06.
- Switch ignition off and on again.
- Leave ignition on for 10 seconds. Then, read the DTC memory of the control module you just connected.
- If the DTC "Powertrain CAN-bus malfunction" is displayed, replace the control module you just connected.
- If the DTC "Powertrain CAN-bus malfunction" is not displayed, connect the next control module and repeat the procedure.

cardiagn.com

24-187

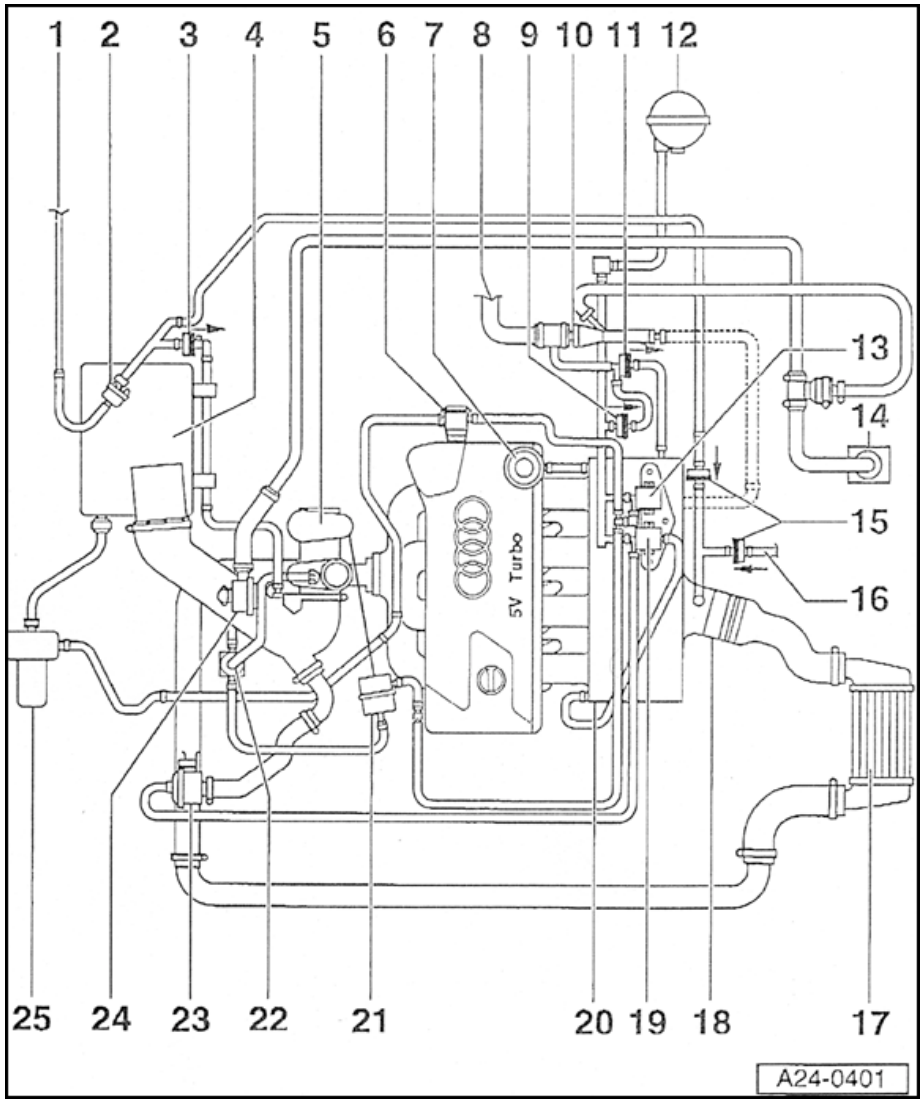

Vacuum diagram

1 - to EVAP canister

2 - Evaporative Emission (EVAP) canister purge regulator valve -N80-

3 - Check-valve for EVAP canister

- between EVAP canister and intake manifold before turbocharger
- Installation position (light/dark side): Arrow points in direction of flow, as shown in figure.

4 - Air cleaner housing

- with Mass Air Flow (MAF) sensor -G70-

5 - Turbocharger

6 - Combination valve for secondary air injection (AIR)

cardiagn.com

24-188

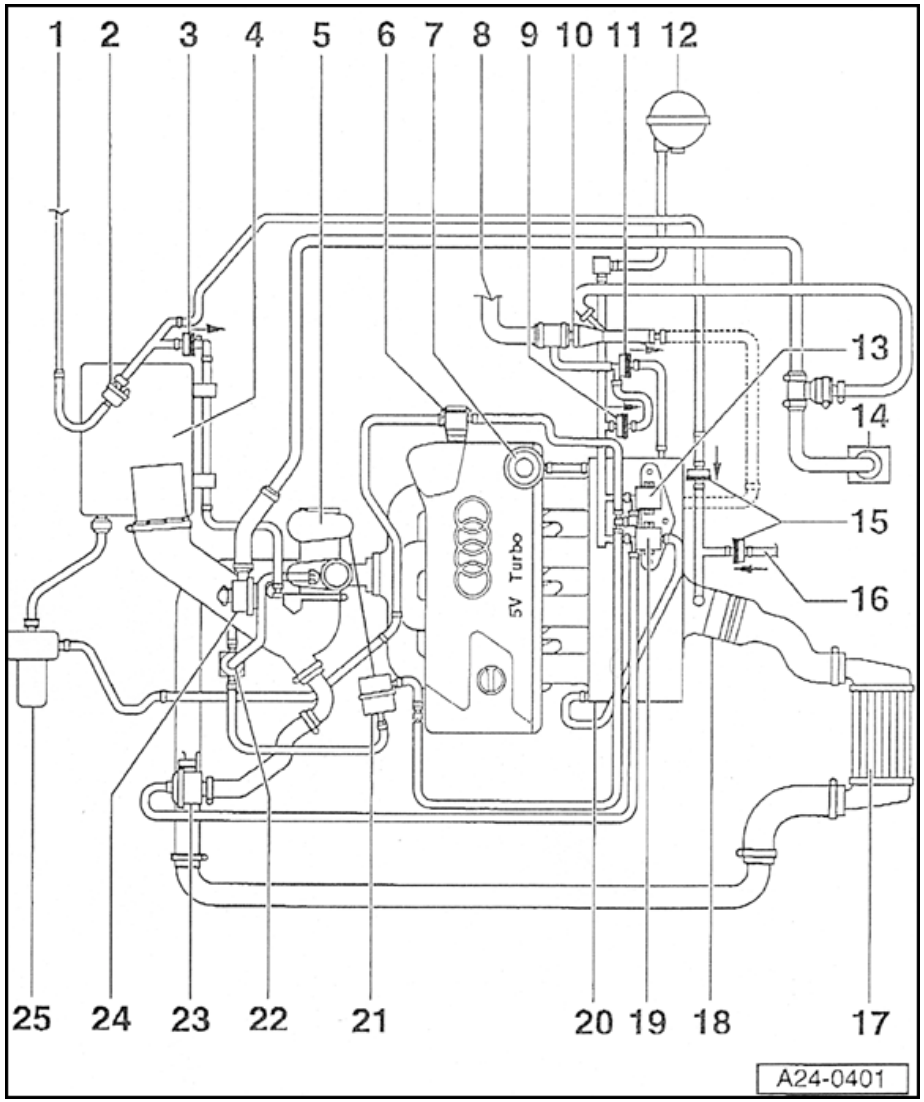

7 - Fuel pressure regulator

8 - To brake booster

9 - Check-valve

- Between brake booster and intake manifold
- Installation position (light/dark side): Arrow points in direction of flow, as shown in figure.

10 - Vacuum booster

11 - Check-valve

- Between brake booster and intake manifold
- Installation position (light/dark side): Arrow points in direction of flow, as shown in figure.

cardiagn.com

24-189

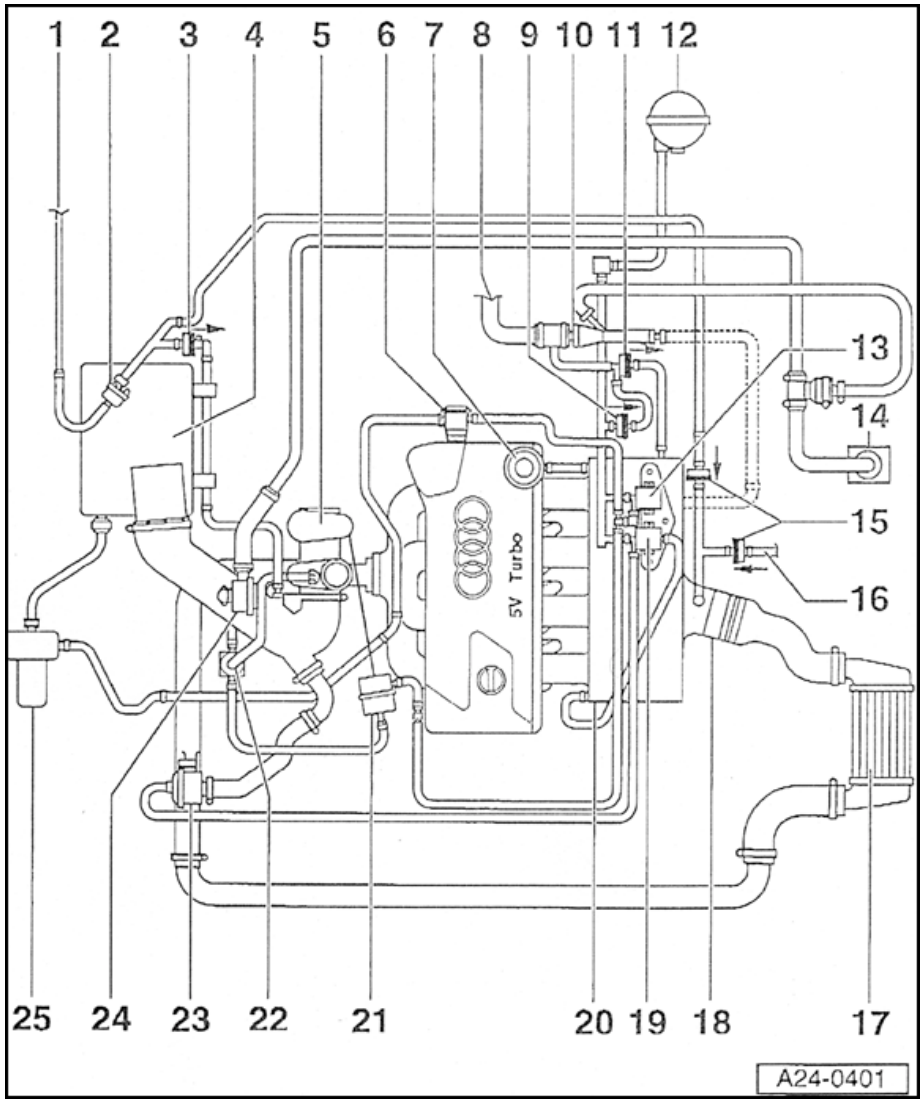

12 - Vacuum reservoir

- Installation location: Under wheel housing liner in front left wheel housing

13 - Secondary Air Injection (AIR) solenoid valve-N112-

- Installation location: Below intake manifold

14 - Crankcase ventilation

15 - Check-valve

- between Leak Detection Pump (LDP) and intake manifold
- Installation position (light/dark side): Arrow points in direction of flow, as shown in figure.

16 - to Leak Detection Pump (LDP) -V144-

cardiagn.com

24-190

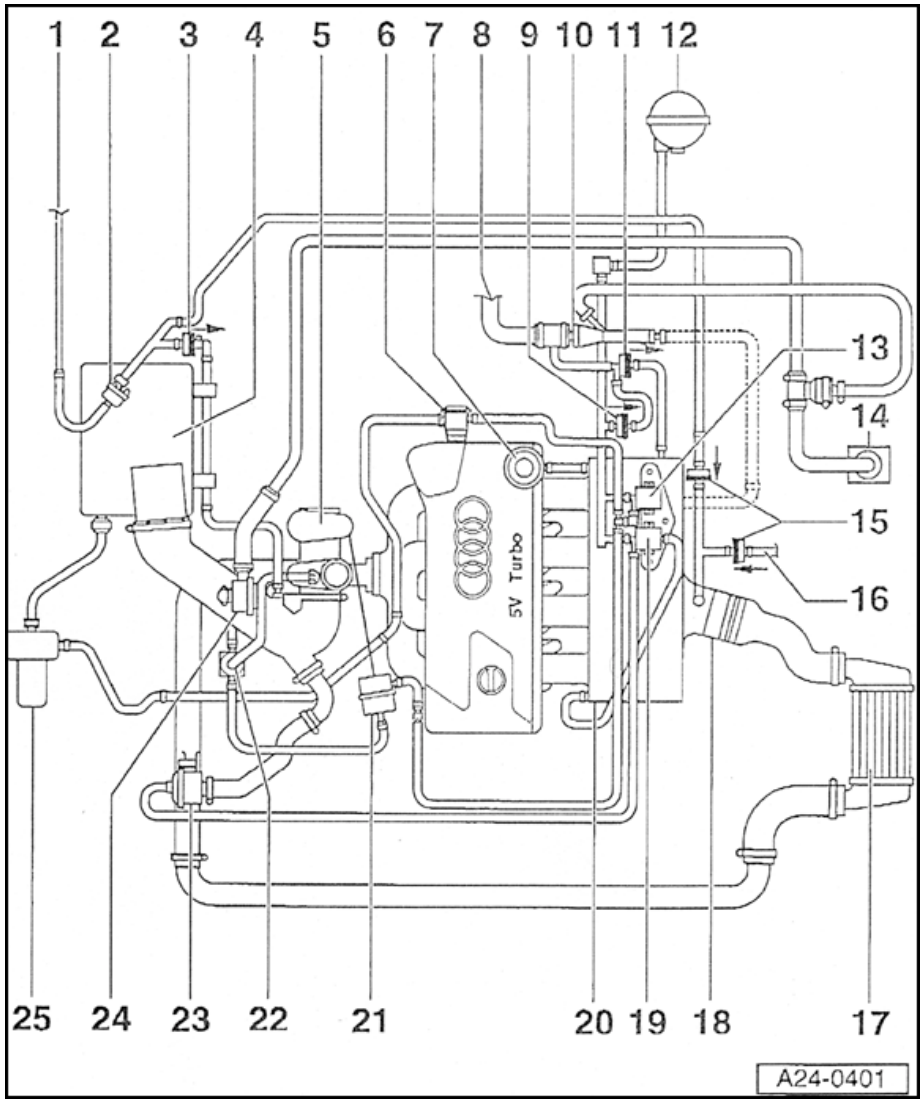

17 - Charge air cooler

- with charge air pressure sensor -G31-

18 - Throttle valve control module -J338-

19 - Recirculating valve for turbocharger-N249-

- Installation location: Below intake manifold

20 - Intake manifold

- with Intake Air Temperature (IAT) sensor -G42-

21 - Vacuum diaphragm for boost pressure regulation

- When the combination valve is opened, the mechanical boost pressure regulation valve in the turbocharger is opened and secondary air is thereby channeled past the turbocharger directly to the catalytic converter

cardiagn.com

24-191

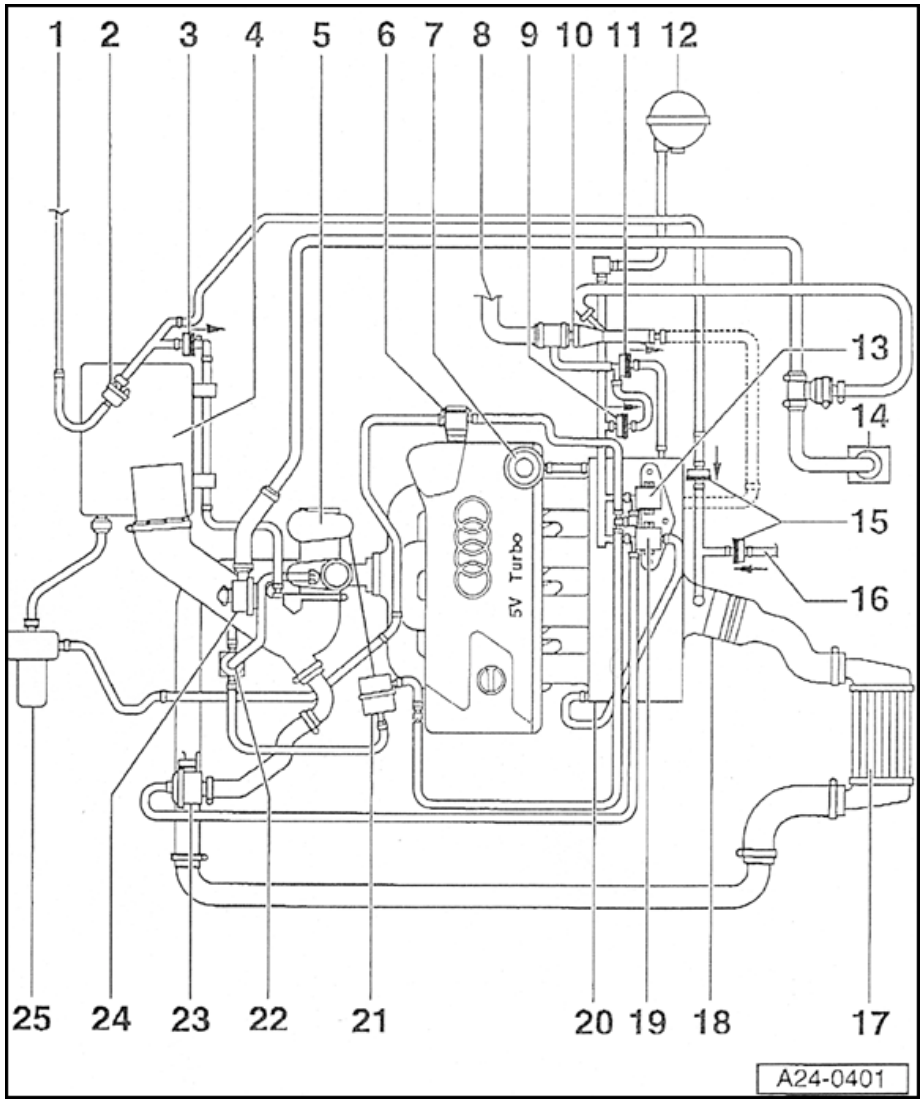

22 - Wastegate bypass regulator valve -N75-

23 - Mechanical recirculation valve

24 - Pressure control valve for crankshaft housing ventilation

25 - Secondary Air Injection (AIR) pump motor-V101-

cardiagn.com